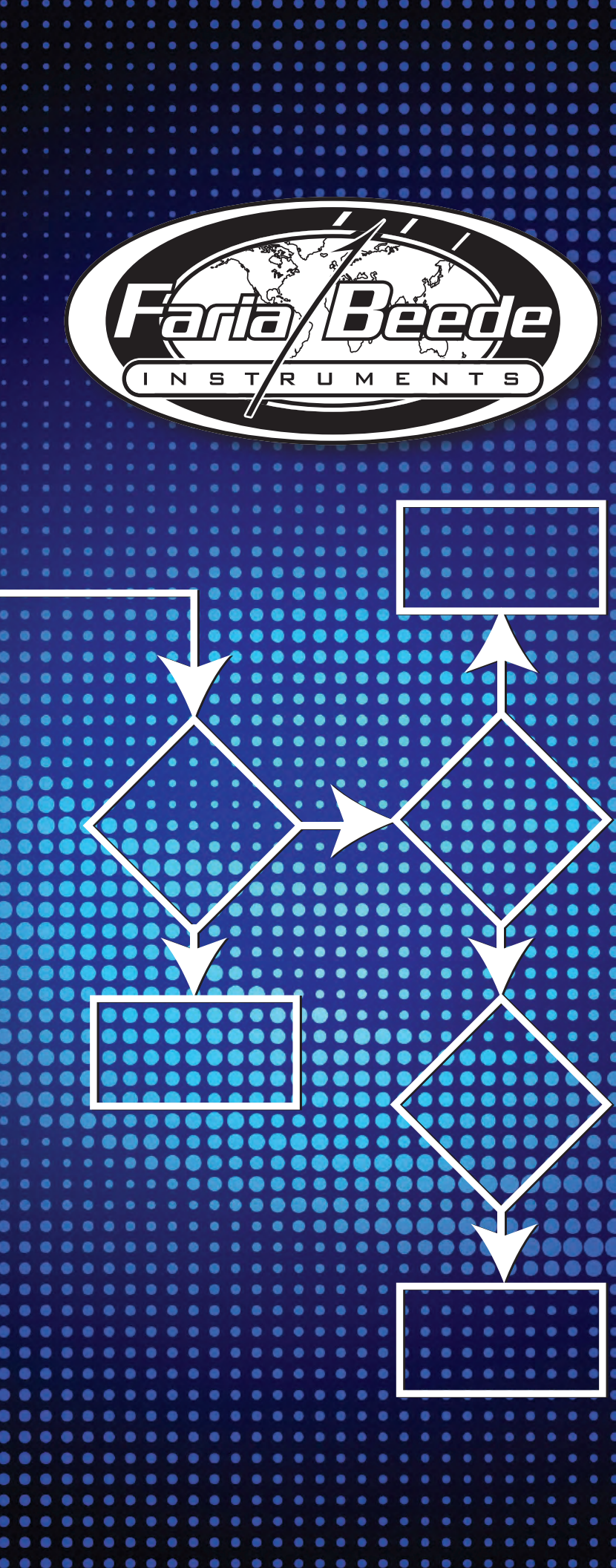

IS0100

Technical Support and Troubleshooting Guide

IS0100 rev Q ecn 10592 6/2017

For Technical Assistance

contact
Faria Beede Instruments - Customer Service
Weekdays between 8:30 AM and 5:30 PM (EST)
(860) 848-9271 ext 1229 or (800) 473-2742

Installation Manuals and User Guides

For more information about the installation of and instructions on how to use our gauges we invite you to check out our website at ***www.FariaBeede.com/manuals.*** Here you will find copies of our current instructions sheets and owner's manuals for your use.

Manufactured by Faria Beede Instruments, Inc., • 75 Frontage Road, Suite 106 • North Stonington, CT 06359
Copyright and all other rights reserved.
Our products are continually being improved. Specifications may change without notice.

Contents

About Your Faria Beede Instruments . . . page 1
IS0374 - Reducing Lens Fogging in your Instrument . . . page 2

Technical Guide

Tachometers
- Operation . . . page 3
- Application . . . page 3
- Calibration . . . page 3
- Troubleshooting . . . page 4

Synchronizers
- Operation . . . page 5
- Calibration . . . page 5
- Troubleshooting . . . page 5

Speedometers (Pitot) - Mechanical
- Operation . . . page 6
- Troubleshooting . . . page 6
- IS0385 - Pitot Speedometer Speed to Pressure Equivalents . . . page 7

Speedometers (Paddle Wheel) - Electronic
- Operation . . . page 8
- Calibration . . . page 8
- Troubleshooting . . . page 8

Speedometer GPS with COG (Course Over Ground) . . . page 9
Speedometer GPS with Depth Sounder . . . page 10
- Operation . . . page 11
- Depth Sounder . . . page 12

Miscellaneous 2” Gauges
- Operation . . . page 13
- Troubleshooting . . . page 13

Voltmeters
- Operation . . . page 15
- Troubleshooting . . . page 15

Ammeters
- Operation . . . page 16
- Troubleshooting . . . page 16

Appendices

IS0090 - Faria Beede Limited Warranty . . . page 17
- IS0073 - Dealer Direct Supplement . . . page 18

Gauges - Hole Sizes
- 2, 3 & 4 inch gauges . . . page 18
- 5 & 7 inch gauges . . . page 19

Technical Specifications . . . page 20
IS0086 - Outboard Tachometer Application Table . . . page 21
IS0085 - Sending Unit Resistance Values Table . . . page 22
ABYC - Engine and Accessory Wiring Color Code Guide . . . page 23
Selecting the Proper Sender . . . page 24
IS0345 - Testing a Faria Beede Gauge with an American Resistance Sender . . . page 25
IS0087 - Testing with the Faria Instrumentation Tester . . . page 26
- To Test a Tachometer . . . page 27
- To Test a Gauge . . . page 27
- To Test a System Check Tachometer or Operator Warning System gauge . . . page 27

Serial Bus - Discrete Digital Instruments (MG3000) . . . page 28
- Operations . . . page 28

MG3000 - Getting Started . . . page 29
- Troubleshooting . . . page 33

Troubleshooting Quick Reference Guide . . . page 35

The Anatomy of a Faria Beede Instrument

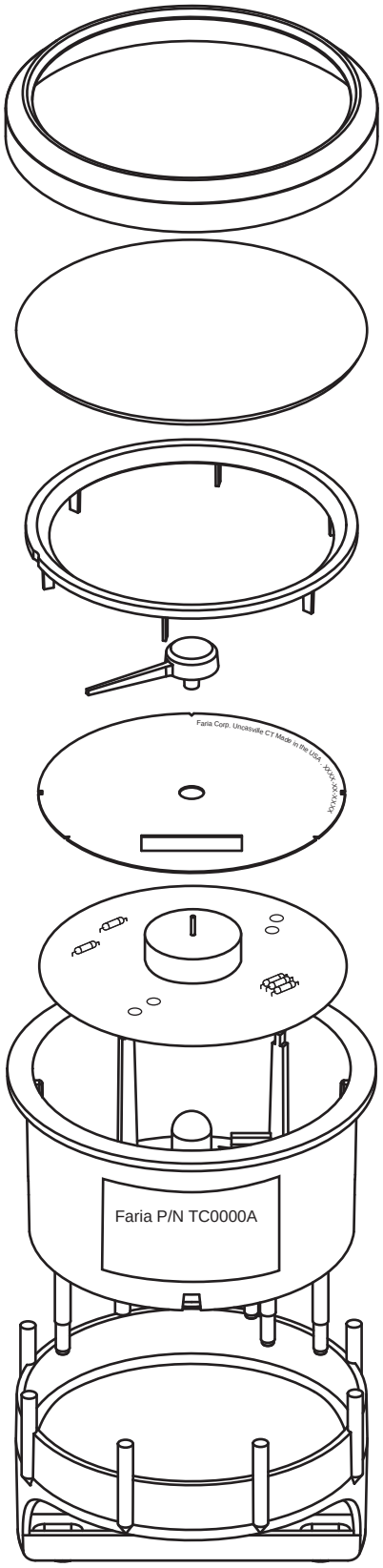

Bezel

Lens

Mask

Pointer

Dial

Artwork number
(DLPXXX or XXXX-XX-XXXX)

Circuit Board

Case

Label with Faria P/N

Back Clamp

Note

Tighten nuts on the backclamp only slightly more than you can tighten with your fingers. Six inch-pounds of torque is sufficient. Overtightening may result in damage to the instrument and may void your warranty.

About Your Faria Beede Instrument

Instrument Facts

Your instruments are manufactured by Faria Beede Instruments., Inc. in North Stonington, CT. Each instrument has been manufactured in an ISO:9001 2008 registered facility, built to stringent standards and has passed a comprehensive quality control procedure prior to shipment. Each instrument is backed by a limited lifetime warranty.

The Instrument System:

Your Instrument System consists of individual gauges, wiring harnesses, senders, sensors and transducers. Each of these items has their own tolerances. If these tolerances "stack up" in opposite directions it can lead to what may be perceived as a larger difference in operating readings than actually exists. As long as the readings are within the engine's specified operating band, the engines are operating properly.

Tachometers:

Most Tachometers have a tolerance ± 2% of full scale (±120 rpm on a 6000-rpm tach). Tachometers will zero when the key is turned on; it doesn't matter what the tach reads with the key off.

Speedometers:

Paddle wheel driven tournament speedometers are manufactured with a fluid filled pointer bobbin. This fluid aids in the control of bounce and reduces rapid movements of the pointer. Due to the viscosity of this fluid, it is important that the instrument not be placed glass side down on a surface for longer than a few seconds. This face down position may cause leakage of the speedometer bobbin fluid, which can then render the instrument unusable and/or irreparable.

Tach-Hourmeter and Digital Hourmeters:

To ensure accuracy, Tach-Hourmeter Combination Instruments utilize Engine Running Only hourmeters. This instrument does not read engine hours until a certain voltage has been achieved during engine use.

Engine Running Only hourmeters by Faria Beede have an icon in the left hand corner of the display. The icon lets the operator know that hours are being displayed.

During normal operations the icon displays solid when the key is on and the engine has not yet been started. Turning the engine on activates the counting function. The icon will begin to blink indicating that the hourmeter is currently counting hours for the connected engine. This is normal.



Fuel gauges:

Fuel gauges may at some times seem to "bounce". In most circumstances this is actually caused by the fuel sloshing in the tank and does not necessarily indicate a problem with the gauge or sender.

Instrument Fogging with Standard Glass Lens:

Most marine instruments have small vents in their cases to allow a way out for moisture that finds its way in. It is possible for moist air to be drawn into the vents when the air inside the gauge cools down after the instrument is turned off. The morning sun can draw this moisture up against the lens, causing fogging. Turning on the instrument with the instrument light "on" will speed up moisture removal. Fogging is not abnormal, nor will it harm your instrument, which is built to withstand the harsh marine environment. (For more information refer Reducing Lens Fogging in your Instrument, page 2)

Instruments with Fog Resistant Lenses:

These instruments are manufactured with a polycarbonate or glass lens which utilize an anti-fog coating. This coating reduces fogging in the instrument.

Radio Transmissions:

Some interference (erratic operation) may be noticed on tachometers or synchronizers during radio transmissions. This will neither damage the instrument nor affect its accuracy when not transmitting.

Pointer Jumping (mostly for older instruments):

Occasionally when an engine has been revved up high and then abruptly shut off, the pointer will fall to the incorrect starting pin on the instrument. (For example, on a 6000 Rpm Tachometer – The pointer sits on the numeral six instead of beginning at zero.) There is a quick on-site fix to this problem. Place a magnet against the glass directly on the end of the pointer resting on the increments. You can slowly move the magnet and drag the pointer back to the zero position.

Reducing Lens Fogging in your Instrument

Instrument Fogging with Standard Glass Lens

Most marine instruments have small vents in their cases to allow a way out for moisture that finds its way in. It is possible for moist air to be drawn into the vents when the air inside the gauge cools down after the instrument is turned off. The morning sun can draw this moisture up against the lens, causing fogging - a fine grey colored mist on the inside of the lens.

Fogging is not abnormal, nor will it harm your instrument, which is built to withstand the harsh marine environment.

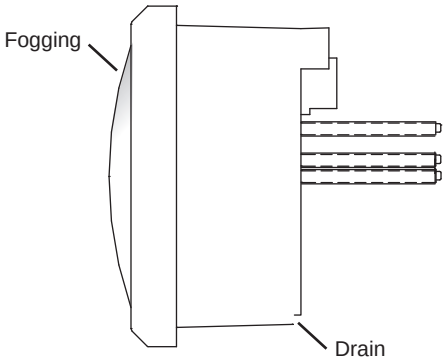

Conditions which can lead to fogging

Several environmental conditions can contribute to fogging; humidity, temperature changes, air flow and installation. Just like the mirror in the bathroom, when the temperature and the humidity from the shower or bath increases the mirror begins to fog.

Like the mirror, the instrument will also start to fog as these conditions change. Although you cannot change the environment there is something that can be done to reduce fogging.

What you can do to help stop fogging?

Turning on the instrument with the instrument light “on” will speed up moisture removal. The heat from the light and the electronics increases the temperature inside of the instrument. As the temperature increases the air is circulated around. The increased airflow should clear the lens of any fogging.

This process is similar to what happens when you turn on the defroster in your car. The warm air blows across the glass reducing the fogging on your windshield.

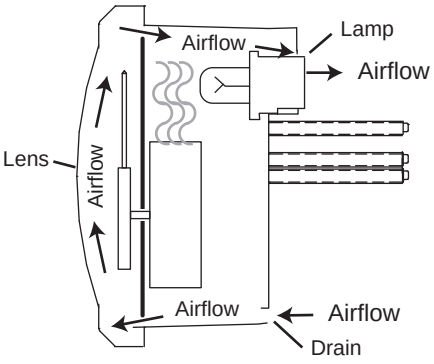

Change the environment

Increasing the flow of air to the rear of the instrument can help reduce fogging. If the instrument is mounted in the helm where air cannot flow freely the chance of the moisture being trapped and being drawn up into the instrument when cooled off is greatly increased.

The best way to prevent moisture build up is to create ventilation in the dash so that air can flow freely throughout. Installing a ventilation system with Louvers or vents increases the airflow and will help prevent fogging in the instruments by reducing the moisture in the environment.

If possible choose a location to mount the instrument where the instrument is facing out at close to a 90˚ axis from the deck. With the instrument in the straight up position the moisture is gathered at the top of the instrument and will help to reduce the fogging on the lens.

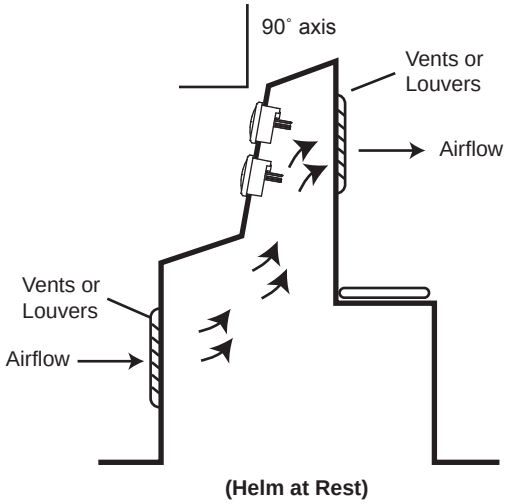

(Helm at Rest)

Instruments with Fog Resistant Lenses

These instruments are manufactured with a poly carbonate or glass lens which utilize an anti-fog coating. This coating helps reduce fogging by adding a water repelling film on the inside of the lens.

Even with the fog resistant coating, exposing the instrument to excessive humidity can cause moisture to condense on the lens (condensation). When washing your boat or storing your boat for long terms, consider venting the helm by opening access ways to allow air to flow more freely.

Reference - IS0374 rev A ecn 10099 04/2015

Tachometers

Operation

Electronic tachometers work by counting pulses generated by the ignition system, alternator, tachometer signal generator, or magnetic pickup sender. The tachometer is hooked up to +12 VDC, Ground, and one of the signal sources listed above. By selecting the right tachometer and setting the switch on the back to the correct position, you let the tachometer know how many pulses are sent per each engine revolution. From this information, the tachometer displays the correct engine speed.

Instrument part numbers are located on a label attached to the outside of the case (i.e. TC000A).

Application

4 cycle engines:

The tachometer signal terminal is connected to the negative terminal on the ignition coil or to a transistorized tachometer driver circuit connected to the ignition system. This circuit will have a wire (usually gray) for connection to the tachometer. The correct tachometer will have a white label on the side indicating which switch position is for each engine type. This label will include 4, 6, and 8 cylinder engines for positions 1, 2 and 3.

Outboard engines:

The tachometer signal terminal is usually contacted to the unrectified AC output of the alternator/lighting coil. Sometimes it is hooked directly to the stator output wire (usually yellow) other times a gray tachometer output lead is provided. The correct tachometer for this application will have a white label on the side with switch positions 4, 6, 8, 10 or 12 pole alternators. The number of poles on the alternator can be determined by checking the Faria® Outboard Tachometer Application table. (page 21)

Diesel engines:

The tachometer signal terminal is hooked up to 1 of 3 things:

a) the ***Alternator***

b) a tach signal generator that is spun by the ***Mechanical Take-off***

c) a ***Magnetic Pickup*** sensor which counts gear teeth

The ***alternator tachometer***: which is also called a variable ratio tachometer is hooked up to the AC output terminal on the alternator. This terminal can be tracked in a variety of different ways: AC. AUX., S, R, TACH or nothing at all. Once installed, the tachometer is then calibrated to that specific engine by using a shop tachometer or a known “no load” governor speed.

The white label on this tach gives the formula: [Crankshaft pulley diameter divided by the alternator pulley diameter times the number of Alternator Poles = N]. “N” is used to determine the correct switch setting. Another adjustment on the back allows for fine tuning.

The ***Switching Diesel Tachometer:*** is hooked up to a tachometer signal generator which is spun by the engines’ mechanical take-off. One of the signal generator’s wires is grounded to the engine and the other is connected to the tachometer’s signal terminal.

The white label on this tach is marked: 1/2:1, 1:1, 1.5:1, 2:1, which corresponds to the different mechanical take-off ratios.

The ***Mag Pickup Tachometer***: hooks up to a magnetic pickup sensor which counts gear teeth. Here neither of the wires is grounded to the block. They are both routed up to the tachometer as a twisted pair. One hooks to the signal terminal and the other to the ground terminal on back of the tachometer.

The switch is set to the approximate number of teeth that the sensor sees on each engine revolution. Another adjustment on the back allows fine tuning to the exact number of teeth. The label is marked in ranges generally from 30 to 160 gear teeth.

Calibration

Using a small screwdriver, SLIGHTLY depress and turn the selector switch on the back of the tachometer to the correct position to match the number of poles in the alternator. (Refer to Outboard Tachometer Application Table, page 21.)

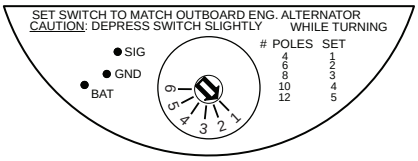

Set up a calibrated “shop tachometer” or “strobe tachometer” to monitor the engine’s true RPM. Start the engine and (after an appropriate warm-up period and with the shift in neutral) increase the engine speed to the boat’s normal cruising RPM read on the shop tachometer.

Remove the stop-plug or paper label corner (at the 8 o’clock position on the rear of the case for most) and insert 5/64” Allen wrench into the “Fine adjustment” trim pot, rotating it CW or CCW as necessary to indicate the true RPM.

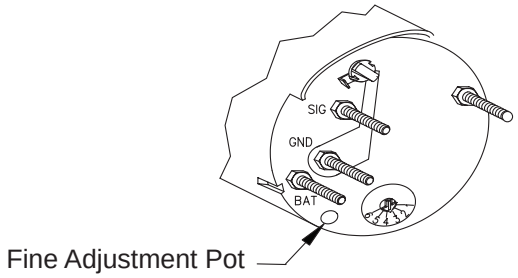

Tachometers (continued)

Symptom recognition is the first step in effective instrumentation troubleshooting.
Tachometers usually exhibit the following symptoms: a) Inoperative, b) pegged, c) erratic, d) reading high, e) reading low, and f) sticky. More thorough tests of all tachometers can be conducted using the Faria® Instrumentation Tester. (page 26).

Troubleshooting

Symptom:

Inoperative	This is usually caused by: a) No power applied, b) No signal supplied, or c) Tachometer is damaged by electrical transients caused by disconnecting the battery with the engine running. 1. Check to see if power is applied to tachometer by switching the instrument power supply switch on and off. As power is applied, the pointer should jump slightly. If it does not, check to see that the wires are installed on the correct terminals and that 12 volts are actually applied to the terminals themselves. 2. If tachometer indicates that power is applied, check for the presence of a signal on the signal terminal. Measure the signal between the signal and ground terminals. This should read in excess of 2 volts DC. 3. If power and signal are present, then it is possible that the tachometer has been damaged by electrical transients.	Replace the tachometer.
Pegged	This condition occurs on tachometers with internal mechanical pointer stops. It is caused by removing power from the tachometer while it is running in excess of mid-scale RPMs or by the switch on back of the tachometer being in between positions. When power is reapplied, the tachometer pointer attempts to go clockwise to zero but can not because the internal stop is in the way.	Set the pole switch to the correct setting. Run engine above the 3000 RPM mark. The pointer should reset. If not, using a magnet, carefully drag the pointer back over the 0 RPM mark and the gauges should reset on power up.
Erratic	This symptom is caused mostly by an intermittent connection between the wire and the ring or spade connector. Often the wire's insulation is pushed into the crimp area and crimped. The center conductor casually touches the connector allowing the tachometer to work most of the time but causing a nightmare for the technician. Electrical noise also can cause erratic readings.	See "Reading High" for further information.
Reading High	This is usually caused by the switch on the back of the tachometer being in the wrong position. If the number of cylinders or alternator poles selected by the switch is too low, the tachometer will read high. If a variable alternator or mag pick-up tachometer is being used, then further calibration may be necessary, as this calibration is done by the end user. Excessive electrical noise may also cause the tachometer to read high. These noise spikes are counted by the tachometer as engine RPM's. The wire affected by the noise can be identified by connecting one wire at a time to the tachometer directly from the battery or the signal source on the engine.	Calibrate
Reading Low	If the number of cylinders or altimeter poles selected by the switch is too high, then the tachometer will read low. If a variable ratio or mag pick-up tachometer is being used, further calibration by the end user maybe necessary.	Calibrate
Sticky	If the tachometer appears to "stick" during operation, slightly loosen the nuts holding back clamp and check operation. If the tachometer now operates properly and is not loose in panel, the tachometer now should provide suitable service. If the tachometer continues to stick during operation	Replace the tachometer.

Synchronizers

Operation

Electronic synchronizers work by comparing the pulse frequencies generated by the ignition systems, alternators, tachometer signal generators, or magnetic pickup senders of dual engine installations.

The synchronizer is hooked up to +12 VDC, Ground, and to each tachometer's signal source. By selecting the right synchronizer (magnetic pickup that use synchronizers that function only in that application) and setting the switch on the back to the correct position, you let the synchronizer compare the frequency of pulses sent per each engine's revolution.

From this information, the synchronizer displays a variance in engine speed by swinging its pointer toward the slower engine. Instrument part numbers are located on a label attached to the outside of the case (i.e. SY0000A).

Calibration

Start the engines and (after an appropriate warm-up period and with shifts in neutral) increase the engine speeds to the boat's normal cruising RPM. (Both tachometers must be properly calibrated) (See Tachometers).

Set the coarse adjustment switch to the proper position described on the label on the side of the case. Remove the stop-plug (at the 8 o'clock position on the rear of the case for most) and insert a 5/16" Allen wrench into the "fine adjustment" trim pot, rotating it CW or CCW as necessary to center the synchronizer.

Troubleshooting

Symptom:

Inoperative	This is usually caused by: a) No power applied, b) No signal supplied, c) Sync damaged by electrical transients caused by disconnecting the battery with the engine running. 1. Check to see if power is applied to synchronizer by switching the instrument power supply switch on and off. As power is applied, the pointer should jump slightly. If it does not, check to see that the wires are installed on the correct terminals and that 12 volts are actually applied to the terminals themselves. 2. If the synchronizer indicates that power is applied, check for the presence of a signal on the signal terminals. Measure the signal between the signal and ground terminals. This should read in excess of 2 volts DC. 3. If power and signals are present, then it is possible that the synchronizer has been damaged by electrical transients. See the enclosed technical bulletin for details.	Replace the synchronizer.
Pegged	(Reading high/Reading low) This condition occurs when the synchronizer is in the wrong switch position or is not calibrated. Another adjustment on the rear of the synchronizer allows for fine tuning.	Calibrate
Erratic	This symptom is caused mostly by an intermittent connection between the wire and the ring or spade connector. Often the wires insulation is pushed into the crimp area and crimped. The center conductor casually touches the connector allowing the sync to work most of the time but causing a nightmare for the technician. Electrical noise can also cause erratic readings. These noise spikes are counted by the sync as engine RPM's. The wire affected by the noise can be identified by connecting one wire at a time to the synchronizer directly from the battery or signal source on the engine.	
Sticky	If the synchronizer appears to "stick" during operation, slightly loosen nuts holding backclamp and check operation. If sync now operates properly and is not loose in panel, the synchronizer now should provide suitable service. If the synchronizer continues to stick during operation.	Replace the synchronizer.

Mechanical (Pitot) Speedometer

Operation

Pitot tube type speedometers operate by pressure from the water being forced into the pitot tube. This pressure is then transmitted through flexible tubing to the bourdon tube movement inside the speedometer head where it is converted into a speed reading by the movement mechanism.

Instrument part numbers are located on a label attached to the outside of the outside of the case (i.e. SE0000A).

Troubleshooting

Symptom:

Sticky	Speedometer does not register or sticks during operation.	Slightly loosen the nut(s) holding back clamp and check operation. If the speedometer now operates properly and is not loose in panel, it should now provide suitable service.
	If the speedometer continues to stick, with back clamp loosened.	Follow the tubing from the speedometer head to the pitot tube water pickup, checking for any sharp bends or kinks that may be impeding the air flow to or from the speedometer unit. Also check for blockage at the pitot tube inlet hole. NOTE: Compressed air at NOT MORE THAN 20 PSI may be used to check speedometer movement for free operation. This is equivalent to approximately 40 MPH. Due to variation in air gauges, etc., This is not a valid test for accuracy. Refer to Pitot Speedo to Pressure Equivalents table. (page 7)
Inoperative	Unit is not registering at all.	Check for breaks in the tubing and loosened connections at the pitot tube and the back of the speedometer. If loose connections are apparent, remove tubing from the pitot tube or speedometer head respectively, cut back the tubing approximately 1/2 inch with a sharp knife and reattach. No adhesive is recommended due to the fact that it may be introduced into the speedometer movement and can cause a malfunction.
	Tubing is free of obstructions, water pickup is not restricted, and unit continues to stick in operation.	Replace the Speedometer.

Pitot Speedometer Speed to Pressure Equivalents

The table represents the equivalent pressure (PSI) the Speedometer needs to present a speed reading.

Using a Certified and Calibrated pressure gauge compare the pressure reading with the MPH reading on the Speedometer.

Caution

Do not exceed the pressure for the maximum MPH of the Speedometer being checked.

Specifications

Accuracy +4% / - 2%] Full Scale Deflection

Movement calibrated at
(dresser) 0 ± .5% mid scale
± 4% full scale

HYSTERESIS (Repeatability)
± 1%

FORMULA
$PSI = .012 \times MPH^2$

MPH READING	*PSIG EQUIV.*	*MPH READING*	*PSIG EQUIV.*
0	0.000	50	30.000
2	0.048	52	32.448
4	0.192	54	34.448
6	0.432	56	37.632
8	0.768	58	40.368
10	1.200	60	43.200
12	1.728	62	46.126
14	2.352	64	49.152
16	3.072	66	52.272
18	3.888	68	55.488
20	4.800	70	58.488
22	5.808	72	62.208
24	6.912	74	65.712
26	8.112	76	69.312
28	9.408	78	73.008
30	10.800	80	76.800
32	12.288	82	80.688
34	13.872	84	84.688
36	15.552	86	88.752
38	17.328	88	92.928
40	19.200	90	97.200
42	21.168	92	101.568
44	23.232	94	106.032
46	25.392	96	110.592
48	27.648	98	115.248

Reference - IS0385 rev A ecn 10295 02/2016

Electronic (Paddle Wheel) Speedometers

Operation

Electronic speedometers operate by capturing pulses produced by a paddle wheel rotating in the water stream under the hull. The pulses are then electronically converted to a speed-reading very much like a tachometer converts ignition pulses to RPM. Instruments part numbers and labeling are similar to a mechanical speedometer.

Calibration

For best results calibration should be performed in calm water with no current or tidal flow present. You will need to time your boat's run over a known distance (such as a measured mile) to calculate MPH, or compare your speed to a GPS, Loran, or Radar gun. Speed runs should be done on plane, at cruise speed, at a constant RPM, and repeated several times to obtain an accurate average speed to which the speedometer will be adjusted. After you are satisfied you are maintaining a known constant speed through your runs, proceed as follows.

1. A Coarse adjustments may be necessary due to variations in hull shape and mounting limitations. The coarse adjustment is made by turning the six-position selector switch at the rear of the case. Start with the switch in position 3 or 4. Increase the setting if the speedometer reads high or decrease the setting if the speedometer reads low.
2. For Fine adjustments remove the weather seal plug on the rear of the speedometer located in the hole marked "ADJ".
3. With the boat at the known speed, carefully vary the adjustment pot (through the hole in the case) with the tool provided (5/64" Allen wrench) until your Faria Beede speedometer is in agreement with the boat's known speed. Turning the pot clockwise raises readings, counter clockwise lowers readings.

Note: For speedometers with the externally adjustable option, the knob on the dash takes the place of the internal Fine adjustment pot.

Troubleshooting

Ensure the Speed Sensor is properly installed.	The sensor is to be mounted so that it is parallel to the water flow at the boat's transom with the small "lip" of the adjustable paddle wheel support hooked against the transom's bottom. Note: It may be necessary to tilt the paddle wheel deeper than parallel to increase high-speed sensitivity. The sensor is adjustable for transoms with zero to 16 degrees aft rake. It is important that the sensor be mounted on the "up wash" side of the prop. This is the Port side for a clockwise rotation and Starboard side for a counter-clockwise rotation as viewed from aft. Ideally the sensor should be located 2 to 4 inches outside the swing of the prop and away from any strakes or bottom features that may disturb the smooth flow of water to the paddle wheel. Testing the Speed Sensor output. Calibration: 152 HZ = 35 MPH (4.34 HZ / MPH) Sensor wiring color codes: Black: Signal, Blue: Positive 12 VDC, Clear: Ground	Calibrate
Test the sensor on the boat connected to the speedometer:	Note: You may not be able to spin the paddle wheel with the boat in the water. 1. Turn the key to the ON position to supply power to the instrument. 2. With the paddle wheel still. Check the VDC Signal to Ground at the back of the speedometer, it should be a bit less than battery voltage. (For example, with a battery voltage of 13 VDC at the rear of the speedometer, Signal to Ground voltage would be about 10 VDC). If the Signal to Ground reading is (Zero VDC) turn the paddle wheel slowly until you get a (10 VDC) reading on the voltmeter. If you slowly turn the paddle wheel and get these alternating voltage readings the sensor is good. If you slowly turn the paddle wheel and the voltage stays the same (10 VDC or Zero VDC), the sensor is bad. 3. Spin the paddle wheel. If the sensor is good: You will read about one half the Signal to Ground VDC or about (5 VDC) with sensor spinning. 4. Spin the paddle wheel. If the sensor is bad: You will read the original Signal to Ground voltage, (10 VDC or Zero VDC) with sensor spinning.	Replace the Speedometer. Replace the sensor.

4” GPS Speedometer with COG

The GPS Speedometer is a drop in replacement for your current speedometer and can be made to match your existing instrument dash.

GPS information is gathered from an internal GPS antenna. No external antenna required. The GPS Speedometer uses a highly accurate 48 channel GPS receiver. You can be sure that the GPS Speedometer is giving you the most accurate GPS information available on the market today.

Course Over Ground (COG) and actual heading (compass heading over ground) are displayed on the optional digital LCD.

Speed data is shown by an analog pointer. This pointer is driven by a digital stepper motor for increased accuracy and minimized pointer bounce during vessel operation.

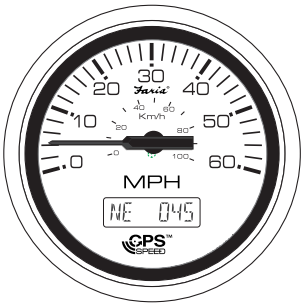

Scale may vary depending on model.

Caution

Disconnect the battery during installation. Tighten nuts on the back clamp only slightly more than you can tighten with your fingers. Six inch-pounds of torque are sufficient. Over tightening may result in damage to the instrument and may void your warranty. Use stranded, insulated wire not lighter than 18 AWG.

Be certain wire insulation is not in danger of melting from engine or exhaust heat or interfering with moving mechanical parts.

Parts

QTY	Description
1	GPS Speedometer
1	Mounting Bracket (BC0102)
2	#8 Brass Nut (5/16”)
2	#8 Brass Flat Washer
2	#8 Split Washer

Installation

1. Cut a 3 3/8” (85 mm) diameter hole in the dash allowing a clearance of 3” (80 mm) for wires. Mount the GPS Speedometer with the backclamp supplied. Use the supplied washers and nuts and tighten
2. Connect the Deutsch connectors.
3. Connect the wire from A - pin 1 to the 12 vDC side of the ignition.
4. Connect the wire from A - pin 2 to the 12 vDC. It is recommend to connect this to an always on 12 vDC source.
5. Connect the wire from A - pin 4 to the 12 vDC side of the ignition.
6. Connect the wire from A - pin 3 with connector to the electrical ground, generally available in several locations at or near the instrument panel.
7. Reconnect the battery.

Operation

1. After turning on the power the speedometer will cycle through a quick self test and display “GPS OK”.
2. Once the Speedometer has a GPS Lock on the satellite the display reads “GPSLOCK” and then starts to display the COG and compass heading.

Note: If starting from a cold start (reapplying power) the GPS Speedometer may require the speedometer to be moving over ground before the data is updated and displayed. Once the GPS Speedometer has reacquired the satellite normal operations should resume.

All data displayed on the GPS Speedometer is for reference only and should not be trusted as a sole navigation source.

Wiring Diagram

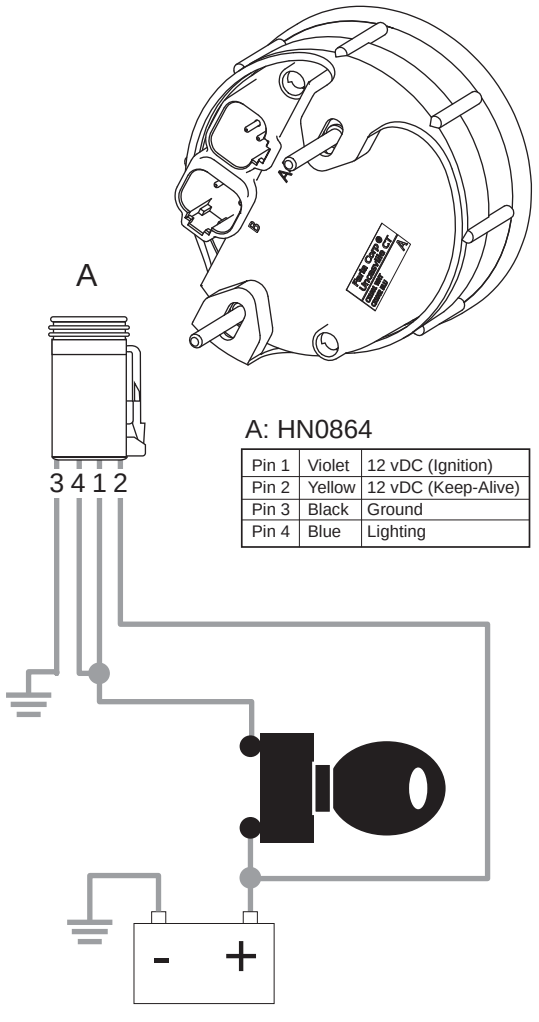

4” GPS Speedometer with Depth Sounder

The GPS Speedometer is a drop in replacement for your current speedometer and can be made to match your existing instrument dash.

GPS information is gathered from a GPS antenna. The GPS Speedometer uses a highly accurate 48 channel GPS receiver.

Speed data is shown by an analog pointer. This pointer is driven by a digital stepper motor for increased accuracy and minimized pointer bounce during vessel operation.

Depth, Trip Log and Settings functions are displayed in the LCD. The Depth Sounder includes audible and visual alarms for Deep Water and Shallow Water conditions and a programmable Keel Offset. Depth can be read in Feet, Fathoms and Meters.

All data displayed on the GPS Speedometer is for reference only and should not be trusted as a sole navigation source.

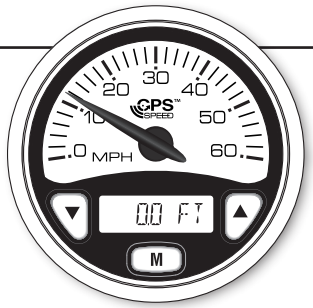

Scale may vary depending on model.

Caution

Disconnect the battery during installation. Tighten nuts on the back clamp only slightly more than you can tighten with your fingers. Six inch-pounds of torque is sufficient. Overtightening may result in damage to the instrument and may void your warranty.

Be certain wire insulation is not in danger of melting from engine or exhaust heat or interfering with moving mechanical parts. For best results, use stranded, insulated wire not lighter than 18AWG that is approved for marine use.

Parts

QTY	Description
1	GPS Speedometer
1	Mounting Bracket (BC0102)
1	GPS108 GPS Antenna
1	HN0357 - Depth Sounder harness
1	HN0353 - GPS Antenna harness
	#8 Brass Hardware (5/16”)

Installation

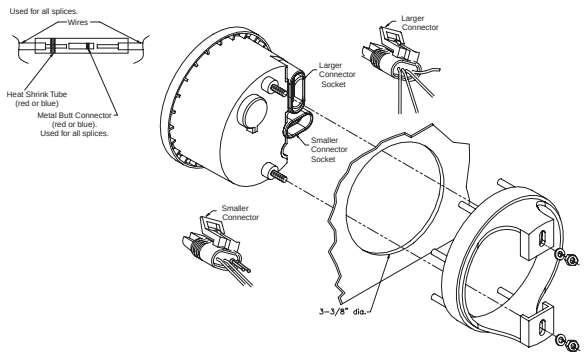

1. Cut a 3 3/8” (85 mm) diameter hole in the dash allowing a clearance of 3” (80 mm) for wires. Mount the GPS Speedometer with the backclamp supplied. Use the supplied washers and nuts and tighten
2. Mount the GPS antenna.

   Note: Although the antenna can be hidden behind the instrument panel, for best results mount the antenna with a view to the sky.

Wire Connections

1. Connect the wire from “B” - pin A (Purple) to the 12 vDC side of the ignition.
2. Connect the wire from “B” - pin B (Purple) to the Red wire from the GPS antenna.
3. Connect the wire from “B” - pin C (Black) with connector to the electrical ground, generally available in several locations at or near the instrument panel.
4. Connect the wire from “B” - pin D (White/Blue) to the Green wire from the GPS antenna.
5. Connect the (Black) wire from the GPS antenna to the electrical ground, generally available in several locations at or near the instrument panel.
6. Connect the wire from “A” - pin A (Blue) to the signal wire of the transducer.
7. Connect the wire from “A” - pin B (Black) to the ground wire of the transducer.
8. Plug the “B” Packard (GPS Antenna) connector into the “B” slot on back of the Speedometer.
9. Plug the “A” Packard (Depth Sounder) connector into the “A” slot on back of the Speedometer.
10. Reconnect the battery.

Wiring Diagram

A: 4 - pin connector (Small Connector)

A	Purple	12 vDC (Ignition)
B	Purple	GPS (+)
C	Black	Ground (-)
D	White/ Blue	Signal

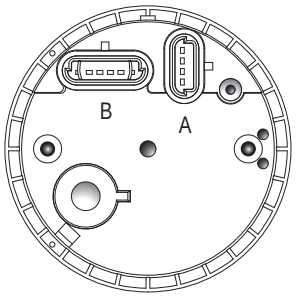

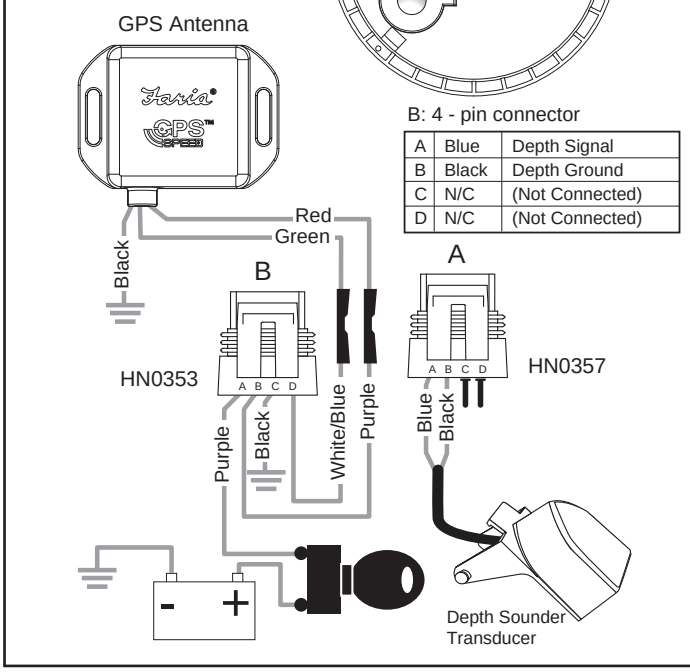

B: 4 - pin connector

A	Blue	Depth Signal
B	Black	Depth Ground
C	N/C	(Not Connected)
D	N/C	(Not Connected)

Operation

1. After turning on the power the speedometer will perform a full scale sweep and go to 5 MPH.

2. Once the Speedometer has a GPS Lock on the satellites the Pointer will read current speed.

Note: If starting from a cold start (reapplying power) the GPS Speedometer may require the speedometer to be moving over ground before the speed is updated. Once the GPS Speedometer has reacquired the satellite normal operations should resume.

Description

The GPS Speedometer has three push buttons;

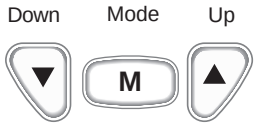

The buttons; “Up,” “Down,” and “Mode”, control the modes of operation. The “Mode” button is used to change the function of the LCD display and to access submenus and adjustable settings. The “Down” and “Up” buttons are used to modify the settings.

In the normal operation mode, pressing the “Mode” button for a short period of time causes the display to cycle between the Depth Sounder display and the Trip Log display. Pressing and holding the “Mode” button causes the display to change to the “settings” submenus.

LCD Display modes

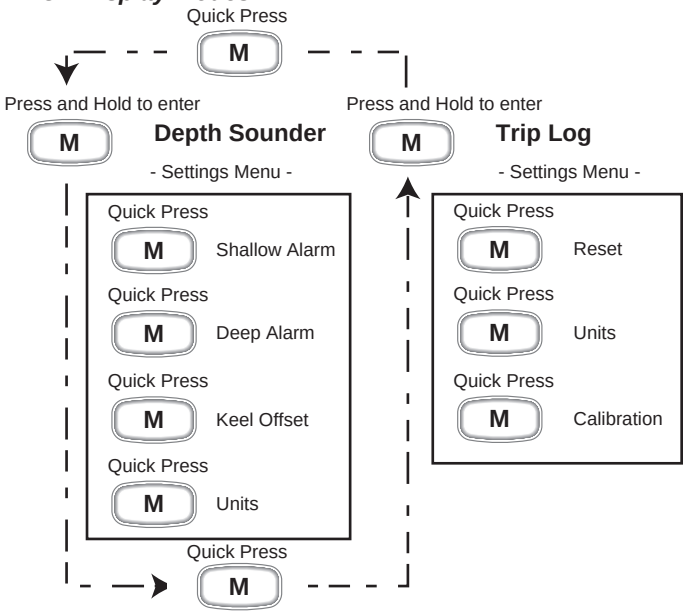

When the settings menus have been selected, pressing the “Mode” button for a short period of time causes the display to cycle through the setting options. Within each setting selection, pressing the “Down” and “Up” buttons causes the affected setting to change. The instrument will automatically record the new settings as you adjust them.

When in a setting menu, pressing and holding the ”Mode“ button returns to main function.

Lighting

In normal operating mode the instrument lighting can be adjusted by pressing the "Up" and "Down" buttons.

Full Scale Adjustment

The Speedometer full scale deflection setting can be changed using the Setup Mode. Use this option only if you have reason to believe that your setting is wrong. Setting an incorrect value in this menu can result in extremely inaccurate performance of the speedometer. To access the Setup Mode, press and hold both the "Up" and "Down" buttons while turning on the instrument.

The display will show "*SETUP*".



Briefly pressing the "Mode" button will change the display to the setting menu. The LCD will flash “S SCALE”, then show the current speedometer scale selection. Use the "Up" or "Down” buttons to modify the setting.



Adjust the Full Scale reading to match dial. The instrument will automatically record the new setting as you modify it.

Pressing and holding the "Mode" button sets the instrument to normal operation.

Note: This is normally a factory setting that needs no adjustment. The setting adjust the "full scale" operating range of the speedometer to match the dial on the instrument. Using the "Up” and "Down" buttons, adjust the setting to match the maximum reading on the speedometer dial.

The speedometer is a digital instrument with the appearance of an analog instrument. The speedometer is designed to be operated from a "pulsed input” sensor. A digitally controlled stepper motor moves the pointer to display speed using a linear dial. The instrument and stepper motor provide excellent accuracy.

Trip Log



The Trip Log is similar to the trip odometer in an automobile. The distance traveled, as recorded by the speedometer, is displayed.



The Trip Log may be reset to zero, the units of measure changed, or the calibration adjusted using the sub menus.

Pressing and holding the "Mode" button while the Trip Log is displayed will change the display to the "settings" menu.

Trip Log "Settings" menu

There are three items in the Trip Log "Settings" menu; Reset, Units, and Calibration. Briefly pressing the "Mode" button cycles through the menu items.

The instrument will automatically record the new settings as you adjust them.

Reset the Trip Log



While in the Trip Log settings menu, use the "Up" and "Down" buttons to select “RESET”. Press the "Up" and "Down" together to reset the Trip Log to zero.

Units



While in the Trip Log settings menu, use the "Up" and "Down" buttons to select “UNITS”. Press the "Up" or "Down" button to select the units of measurement for the Trip Log.

Select between miles (MI)



and nautical miles (NM).



Calibration



Do not use this mode to calibrate the Speedometer. The Speedometer uses a live GPS signal and requires no calibration.

Warning: Trying to calibrate this speedometer with this calibration system can create problems with the speedometer portion of this instrument.

Depth Sounder

The depth can be displayed in feet, meters, or fathoms. Audible and visual alarms can be set to warn of shallow or deep water conditions.

A "keel offset" setting allows the operator to adjust for the difference in the location of the Depth transducer compared to the deepest part of the boats hull. The various settings are accessed by pressing and holding the "Mode" button while the Depth Sounder is displayed.



Depth Sounder "Settings" menu

There are four items in the Depth Sounder "Settings" menu; Shallow Alarm, Deep Alarm, Keel Offset, and Units. Briefly pressing the "Mode" button cycles through the menu items.

The instrument will automatically record the new settings as you adjust them.



Shallow Alarm



Pressing the "Up" or "Down" button changes the setting for the Shallow Alarm.

Setting the Shallow Alarm to zero turns off the alarm. To have this alarm indicate the depth of water under the deepest part of the hull, the Keel Offset must be properly set.

Deep Alarm



Pressing the "Up" or "Down" button changes the setting for the Deep Alarm Setting Deep Alarm to zero turns off the alarm.

Keel Offset



Pressing the "Up" or "Down" button changes the setting for the Keel Offset.

Negative numbers indicate that the Depth Sounder transducer is located ABOVE the deepest part of the hull (typical). Allow the worst case boat loading when adjusting the Keel Offset as this setting affects the Shallow Alarm.

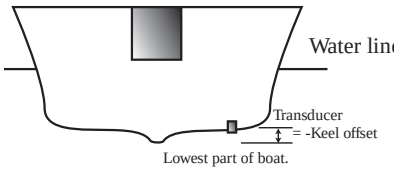

Units



Pressing the "Up" or "Down" button cycles the units of measurement for the Depth Sounder between

feet (FT),



meters (m),



and fathoms (FA).



Loss of Signal

When the Speedometer looses signal from the transducer the LCD display will flash the following:



Calibration

Do not use this mode to calibrate the Speedometer. The Speedometer uses a live GPS signal and requires no calibration.

Warning: Trying to calibrate this speedometer with this calibration system can create problems with the speedometer portion of this instrument.

Gauges - 2” Miscellaneous

Operation

Gauges operate by sending a low amperage current through the gauge’s meter to ground via a sending unit with variable resistance. The resistance of the sending units increase or decrease with the changes in pressure, temperature, tilt, etc. As the sender’s resistance varies, the amount of current allowed to flow through it to ground changes and the meter deflects.

Instrument part numbers are located on a label attached to the outside of the case (i.e. GP0000A).

Troubleshooting

Symptom:

Sticky	Slightly loosen nuts holding hack clamp and check operation. If gauge now operates properly and is not loose in panel, gauge now should provide suitable service.	If gauge continues to stick during operation -- replace gauge.
Inoperative	Test for voltage to the gauge (use a 12 volt test light or voltmeter for testing)	a) Turn key switch to the ON position. Connect the test light or voltmeter lead to the ignition “I” terminal of the gauge and the other lead to the ground “G” or “GND” terminal of the gauge. If test light lights or approximately 12 volts is indicated on the test meter, the ignition and ground lead connections are good. b) If test light does not light or there is no reading on the test voltmeter, check the positive 12 volt power source at the key switch of fuse block. If power is available at those points, correct the lead problem or replace any blown fuses. c) If test light still does not light or voltmeter still shows no voltage, check ground lead and connections by connecting one lead of test light or voltmeter to a known source of B(+) and the other lead to the ground terminal of the gauge. If lamp lights or voltage is indicated on the voltmeter while touching the ground terminal of the gauge, the ground connection to the gauge is good. If lamp does not light or voltmeter does not show voltage, check ground connection to gauge, ground wire, and ground connection to ground source.
	Test gauge operation and sending unit connections (after performing electrical checks above)	a) Turn key switch to the OFF position. Connect jumper lead between the “S” terminal and the “G” or “GND” terminal of the gauge. Turn the key switch to the ON position. If the gauge registers a full scale reading under those conditions, the gauge is good. If a less than full scale reading is indicated, the gauge is defective and should be replaced.

Miscellaneous Gauges (continued)

Inoperative (continued)		Note: European resistance gauges will operate in reverse. b) If no reading is indicated, remove the sending unit lead wire from the sending unit on the engine. Turn the key switch to the “ON” position. Ground the sending unit lead wire to a good ground and note the gauge reading. If the gauge registers a full scale reading, the sending unit may be defective. c) Remove the jumper lead. Remove the sending unit lead wire from the sending unit on the engine. Turn the key switch to ON position. Ground the sending unit lead wire to a good ground and note the gauge reading. If the gauge now (after grounding the sending unit lead wire) registers a full scale reading, the sending unit is defective and should be replaced. (Refer to Outboard Tachometer Application Table, page 17 and Sending Unit Resistance Values Table, page 18)
	Gauge is Out of Calibration	NOTE: Intermittent readings usually indicate loose connections or shorted wiring. Check all connections and wiring if the above checks do not pin point a specific defect. Disconnect sending unit lead wire from gauge. Connect ICSI resistance as shown in the Sending unit Resistance Value Table (page 18) between sender (S) terminal of the gauge and ground. Gauge should indicate the approximate range indicated in chart.
	Sending Unit is defective	If the readings on the gauge do not match those on the table (gauge pegs early or doesn’t read) and ohms resistance is correct as measured by an ohmmeter, gauge may not be correctly matched to sender, or gauge is out of calibration. Disconnect the sending unit lead from the gauge “sender” terminal. Using an ohmmeter, test the sending unit resistance per the Sending Unit Resistance Value Table (page 18). If sending unit shows “0” ohms or open circuit, check the sending unit at the motor and/or wiring for defects.

Gauges - Voltmeters

Operation

A voltmeter indicates the battery voltage and the general condition of the battery charging system. The meter requires no warm-up and indicates voltage changes instantly.

Instrument part numbers are located on a label attached to the outside of the case (i.e. VP0000A).

Troubleshooting

Symptom:

Sticky	Voltmeter does not register or sticks during operation.	Slightly loosen the nuts holding the backclamp and check operation. If gauge now operates properly and is not loose in panel, the gauge should provide suitable service. If the gauge continues to stick during operation, replace voltmeter.
Inoperative	No voltage reading is noted on the voltmeter:	1. If the indications are normal (engine starts, lamp lights etc.) proceed with this test, otherwise, check the battery voltage with a test voltmeter, or a 12 volt test light. 2. Check for voltage at voltmeter by connecting a test voltmeter or a 12 volt test light to “+” and to the terminals of voltmeter; turn ignition switch on. a) If the light does not light, or if the test voltmeter reads the same as the installed voltmeter, the problem is in the battery charging system or wiring. See the manufacturers shop manual for trouble-shooting procedure. b) If the test voltmeter indicates correct voltage; typically 14 volts with engine running and at least 12 volts with no accessories on and engine off (see engine shop manual for details), then replace the voltmeter.

Gauges - Ammeters

Operation

An ammeter indicates the current flow through the battery charging system. A “center zero” ammeter, during charging, shows a (+) positive reading indicating current flowing to the battery (charge). A (-) negative reading indicates current flowing away from the battery (discharge).

Instrument part numbers are located on a label attached to the outside of the case (i.e. AP0000A).

Troubleshooting

Symptom:

Sticky	Ammeter does not register or sticks during operation.	Slightly loosen the nuts holding the backclamp and check operation. If gauge now operates properly and is not loose in panel, the gauge should provide suitable service. If the gauge continues to stick during operation.	Replace ammeter
Reads Backwards	Ammeter shows (charge) with the engine off with a load on the battery and (discharge) with the engine running.	The Ammeter is installed incorrectly.	Reverse the leads at the rear of the ammeter.
Inoperative	Ammeter does not read “charge” or “discharge”.	Check for a bad connection in the charging circuit that may have caused a surge of current burning out the ammeter.	Replace ammeter

Faria Beede Limited Warranty

During the initial warranty period of 36 months from date of original retail purchase (12 months on fog resistant lens, Fuel Manager, Depth Sounder, Commander-Speedo, Commander-Tach, Pilot I, Pilot II, MG1000, MG2000 and MG3000 and 24 months on Senders, Transducers, Triducers and Smartducers), any instrument(s) that fails due to defects in materials or workmanship will be repaired or replaced at Faria Beede Instruments' option at no charge.

Once beyond the initial warranty period the repair fees listed apply. Upon completion of repair or replacement the applicable initial warranty period of 36/12 months is then renewed.

To submit a Warranty Claim or Repair, go to our repair website; ***warranty.fariabeede.com***, and complete the form. You will be given an authorization number to return the instrument, postage prepaid and packaged to prevent damage while in transit, include your name, address, daytime telephone number, sales receipt, and a brief description of the problem. For all non warranty repairs a shipping and handling fee of $18.50 will be applied to the repair for standard shipments.

Your part(s) will be promptly returned to you once analyzed, repaired or replaced. Instrument styles which are no longer manufactured, may be replaced with a similar instrument of equal or greater value.

If you have questions call **Faria Beede Customer Service at 1-800-473-2742** weekdays 8:30 a.m. until 5:00 p.m. Eastern Time. One of our Application's Specialists will review the problem with you in detail.

***Repair Fees** for gauges beyond the initial warranty period

2 inch instruments (not specified)	$55.00	Standard Tachometer, Synchronizer	
2 inch Clock or Hourmeter	$75.00	or Electronic Speedometer	$100.00
2 inch Warning System Indicator	$75.00	Standard Tachometer with Hourmeter or	
2 inch Honda Trim	$75.00	System Indicator	$125.00
Digital Depth Sounder	$100.00	Multifunction Instruments	$125.00
Standard Speedometer or Water Pressure gauge	$55.00	**MG electronic instruments**	
Electronic Speedometer with sensor	$100.00	Speedometer or Tachometer	$225.00
		Senders and Transducers	$65.00
		Triducers and Smartducers	$225.00

Removal / reinstallation expenses, any damage to an instrument resulting from natural disasters, misuse, neglect, accident, misapplication, improper installation, unauthorized repair or alteration, and instruments purchased prior to March 1, 1985 are not covered by this warranty. Instruments returned to Faria Beede Instruments, Inc. that are not covered under this warranty will be repaired or replaced at our nominal service rates or returned to you as is, at your option. Faria Beede Instruments, Inc. expressly disclaims any liability for incidental of consequential damage caused by product defects. Some states do not allow the exclusion or limitation of consequential damages, so the above may not apply to you. The Warranty herein is in lieu of any other expressed warranty of merchantability or fitness or any other obligation on the part of Faria Beede Instruments, Inc., or the seller. All implied warranties are limited to the initial 36 month period. Some states do not allow limitation on how long an implied warranty lasts, so the above limitation may not apply to you. This warranty gives you specific legal rights, and you also have other rights which vary from state to state.

*These fees are in effect as of 5/01/2013 and are subject to change without notice.

Reference IS0090 Rev. L ecn 10019 12/2014

Dealer Direct Supplement to the Faria Beede Limited Warranty

During the first 24 months from the date of original retail purchase (12 months on fog resistant lens, Fuel Manager, Depth Sounder, Commander-Speedo, Commander-Tach, Pilot I, Pilot II, MG1000, MG2000 and MG3000 and 24 months on Senders, Transducers, Triducers and Smartducers), Faria Beede Instruments will provide an advance replacement at no charge, shipped within 24 hours, freight prepaid, and will pay $13.50 labor/freight reimbursement to qualified dealers for replacement of any Faria Beede instruments purchased after May 31, 1994, returned to Faria Beede, and found to be defective due to materials or workmanship.

To submit a Dealer-Direct Warranty claim, call Faria Beede Customer Service at 1-800-473-2742. One of our marine application specialists will review the problem with you in detail. If no solution is found, a replacement will be shipped at no charge directly to you the next business day via priority mail, freight prepaid. Any requests for premium freight via UPS Red or Blue, FedEx Overnight etc. will carry a $10.00 handling fee in addition to the premium freight charges. Same day shipping is not available.

Upon receipt, simply return the original instrument in the same box along with the completed warranty tag, postage prepaid to: Faria Beede Instruments, Warranty Service, P.O. Box 983, 385 Norwich-New London Turnpike, North Stonington, CT 06359.

You will be paid $13.50 labor/freight reimbursement for each Faria Beede instrument returned and found to be defective. No instruments will be returned to Dealers.

Reference IS0073 Rev. D 10/2006

Gauges - Hole Sizes 2”, 3” and 4”

2-Inch Gauge
2-Inch Gauge - NexSysLink

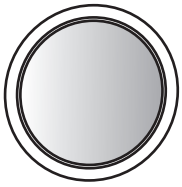

Hole Size	2.0625” (53mm)
Outer Bezel Dia.	2.25” (57mm)
Dial View	1.813” (20.65 mm)
Bezel Depth	0.3“ (8 mm)

Minimum space behind instrument panel: 3.5” (89 mm)

3-Inch Gauge - NexSysLink

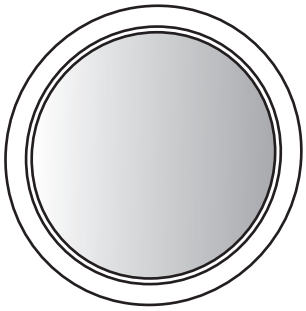

Hole Size	3.38” (85mm)
Outer Bezel Dia.	3.8” (97mm)
Dial View	3.21” (82 mm)
Bezel Depth	0.5“ (13 mm)

Minimum space behind instrument panel:
NexSysLink MSI 3.75” (96 mm)

4-Inch Gauge

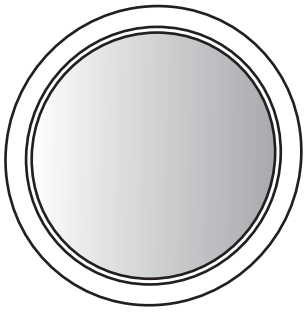

Hole Size	3.375” (85mm)
Outer Bezel Dia.	3.8” (97mm)
Dial View	3.125” (80 mm)
Bezel Depth	0.5“ (13 mm)

Minimum space behind instrument panel:

Speedometer - Mechanical	3.75” (96 mm)
Speedometer - Digital	3.65” (93 mm)
Tachometer	3.75” (96 mm)
MG3000	3.75 (96 mm)
Multi-Function	4.25” (108 mm)

Gauges - Hole Sizes - 5” and 7”

5-Inch Gauge

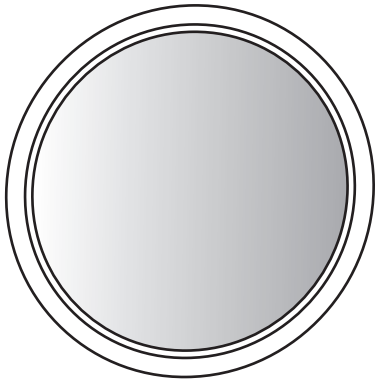

Hole Size	4.375” (112mm)
Outer Bezel Dia.	4.8” (122mm)
Dial View	4.5” (114 mm)
Bezel Depth	0.5“ (13 mm)

Minimum space behind instrument panel:

Speedometer - Mechanical	4.75” (121 mm)
Speedometer - Digital	4.65” (118 mm)
Tachometer	4.75” (121 mm)
MG3000	4.75 (121 mm)
Multi-Function	4.25” (108 mm)

5-Inch Gauge - NexSysLink

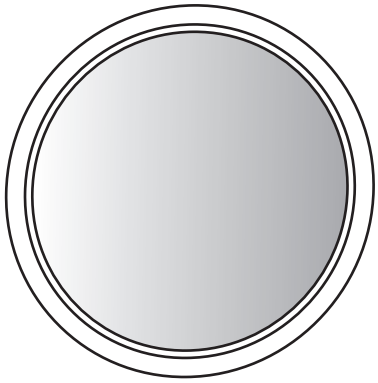

Hole Size	4.65” (118mm)
Outer Bezel Dia.	4.8” (122mm)
Dial View	3.21” (82 mm)
Bezel Depth	0.375“ (10 mm)

Minimum space behind instrument panel:

NexSysLink MSI	3.75” (96 mm)

7-Inch Gauge

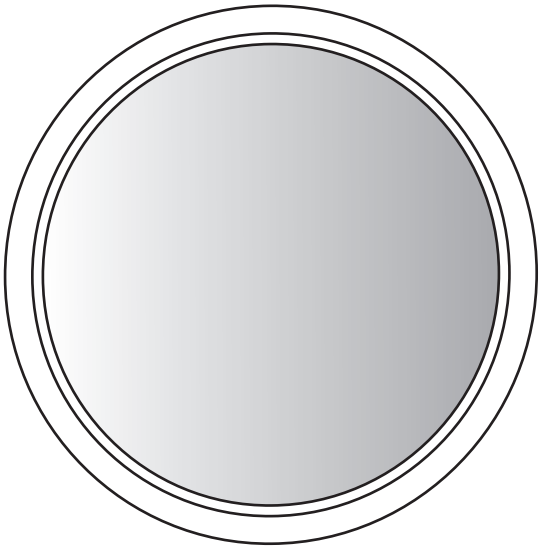

Hole Size	6.5” (165 mm)
Outer Bezel Dia.	7.25” (184 mm)
Dial View	6.375” (162 mm)
Bezel Depth	0.5“ (13 mm)

Minimum space behind instrument panel:
3.75” (96 mm)

Technical Specifications

4” & 5” Electronic Instruments

Operating Temperature	-4 °F to +158 ° F (-20 °C to +70 °C)
Storage Temperature	-22 °F to +185 ° F (-30 °C to +85 °C)
Lighting	See product line for specific information
Operating Voltage	11.5 to 16 volts
Nominal Voltage	14.2 volts
Current Consumption	< 100 mA, without illumination
Bezel	Stainless Steel or Aluminum - see product line for specific information
Lens	Glass or Polycarbonate - see product line for specific information
Connection	Studs, blade terminals, connectors - see product line for specific information
Mounting Bracket	Plastic mounting clamp. Clamping range 0 -.8” (0-20 mm)
Torque	5 to 7 inch pounds (.57 - .80 Nm)
Mounting Hole	3 3/8” (85 mm) for 4” Instrument – 4 3/8” (112 mm) for 5” Instrument

4” & 5” Mechanical Instruments

Operating Temperature	-22 °F to +185 ° F (-30 °C to +85 °C)
Storage Temperature	-40 °F to +221 ° F (-40 °C to +105 °C)
Lighting	See product line for specific information
Bezel	Stainless Steel or Aluminum - see product line for specific information
Lens	Glass or Polycarbonate - see product line for specific information
Connection	Studs, blade terminals - see product line for specific information
Mounting Bracket	Plastic mounting clamp. Clamping range 0 -.8” (0-20 mm)
Torque	5 to 7 inch pounds (.57 - .80 Nm)
Mounting Hole	3 3/8” (85 mm) for 4” Instrument – 4 3/8” (112 mm) for 5” Instrument

2” Electronic Instruments

Operating Temperature	-4 °F to +158 ° F (-20 °C to +70 °C)
Storage Temperature	-22 °F to +185 ° F (-30 °C to +85 °C)
Lighting	See product line for specific information
Operating Voltage	11.5 to 16 volts
Nominal Voltage	14.2 volts
Current Consumption	< 100 mA, without illumination
Bezel	Stainless Steel or Aluminum - see product line for specific information
Lens	Glass or Polycarbonate - see product line for specific information
Connection	Studs, blade terminals, connectors - see product line for specific information
Mounting Bracket	Plastic mounting clamp. Clamping range 0 -.8” (0-20 mm)
Torque	5 to 7 inch pounds (.57 - .80 Nm)
Mounting Hole	2 1/16” (53 mm) for 2” Instrument

2” Mechanical Instruments

Operating Temperature	-22 °F to +185 ° F (-30 °C to +85 °C)
Storage Temperature	-40 °F to +221 ° F (-40 °C to +105 °C)
Lighting	See product line for specific information
Bezel	Stainless Steel or Aluminum - see product line for specific information
Lens	Glass or Polycarbonate - see product line for specific information
Connection	Studs, blade terminals - see product line for specific information
Mounting Bracket	Plastic clamp, metal on water pressure. Clamping range 0 -.8” (0-20 mm)
Torque	5 to 7 inch pounds (.57 - .80 Nm)
Mounting Hole	2 1/16” (53 mm) for 2” Instrument

Tachometer Applications

OutBoard Engines

Make / Year	Model	# of Poles
Chrysler 1968 - 1983	35 HP, 70 HP & up 55, 60, 85 & 125 HP	12 20
Force 1984 - 1999 Some older Force engines are 20 pole (see note f.)	50 HP through early 1987 (A,B models) 35 HP (1986 & later) 40 HP (1991 & later) 50 HP (1992 B models & later) 70 HP (1991 & later) 90 - 120 HP L-Drive (1991 B & later) 145 HP L-Drive (1991 & later)	8 12
Honda to Present Older tiller models require Honda jumper wire 32197-ZH8-003, BF 40/50 HP require 06383-ZV5-315 Tach Kit (thru 2005)	BF 75/100A, BF 8A, BF 9.9/15A HP BF 25/30, BF60, BF 75/90 HP BF 40/50 (2006 and later) BF 115 /130 HP BF 135/150 HP, BF 200/225 HP BF 35/45, BF 40/50 HP (thru 2005) BF 8D/9.9D, BF 15D/ 20D (Includes Power Thrust Models)	4 6 12
Mercury/Mariner 1977 to Present (See note "e") *Use Tach adapter #17461A9 Service #17461T9 **Use Tach adapter MM #17461A8 or A10 Service #56-883040A1 SmartCraft requires AGI converter for Analog Gauges.	18, 25, 48, 60 HP Mariner through 1983 8, 9.9, 15 and 25 HP (4 stroke)(after1998-2004) Less than 40 HP - All Before 1999 40 HP (serial # 582399 and before) 8, 9.9 (Before 1999 and after 2005) & 50H (4 stroke) Verado 200 - 400 HP 6 to 25 HP 1999 & up, *2002 & up 25 HP & 30 HP (4 stroke) 40 HP (after serial # 582399) 45 HP (1987), 50-60 HP (4 stroke EFI) 50 HP & above, ** 75, 90,115 HP (4 stroke EFI) 135, 150, 200, 225 HP, DI 3.0L EFI 225 & 250 HP Pro Max 3.0L 300 HP EFI	4 6 8 10 12
Evinrude/Johnson 1977 to Present for 88 HP {90} & 112 HP {115} a voltage reg. kit is recommended. A System Check Tach or 2" gauge is required	9.9 HP -15 HP 4 stroke after 2001 All 2 cylinders less than 70 HP (Pre 1993) 9.9 HP & 15 HP (2 cylinder) (4 stroke) 25-35 HP 3 CYL 40-50 HP, 2 cylinder (1993 & later) 60 HP, 3 cylinder (1985 & later) 70 HP & greater, including sea drives All FICHT models All E-Tech 40 HP - 250 HP	6 10 12

Make / Year	Model	# of Poles
Suzuki to Present A System Monitor Tach or 2" gauge is required	Less than 55 HP - All, DT55, 2-Stroke Models 60 HP, 65 HP thru 1985, DT 2-Stroke Models 50 - 60 HP Cabrea, DT 2-Stroke Models	4
	DF 2.5 through DF 15, DF 25 V(TWIN) 2006 & later 25 HP & 30 HP (1993 & later) DT 2-Stroke Models 55 HP & 65 HP (1985 & later) DT 2-Stroke Models	6
	75 HP & up (1985 & later) DF 25 through DF 30 (3 Cyl Models), DT 2-Stroke Models 75 HP and up (Cabrea) DT 2-Stroke Models 115 HP and up (1988 & later), DT 2-Stroke Models DF 40 through DF 250, (4 stroke) ALL	12
Tohatsu / Nissan to Present (See note "e").	(2 strokes) 8 HP, 9.8, 9.9, 15, 18, 25, 30, 40C, M40C or less (all 2 cylinder) All TLDI 40 through 115	4
	(2 strokes) M40D, 40D2, 50D, 50D2, 70B and CM90A (all 3 cylinder) (4 strokes) MFS20 or less	6
	(2 strokes) 115 HP, 120 HP, 140 HP, M115A-M140A (all 4 cyl.) (4 strokes) 8, 9.8, 9.9, 15, 18, 25 & 30 HP, EFI 25, 30, MFS25/30 (3 cyl)	12
Yamaha 1984 to Present S250B and V8 four stroke will not support a conventional tachometer.	6 HP - 25 HP (2 cyl '84-'87), F/T 9.9 ('85-'91) C25 - C55 (2 cyl) Except C30 (2cyl '93-'97)	4
	F/T 9.9 (MID '92 on), C30-C70 (3 cyl) C30 (2 cyl '93-'97), 25 HP (3 cyl), 25HP (2cyl, '88-'05) C/P/E 30-70, F8, F15, F20	6
	F/T 25-F250, HPDI 150-300, 80-SX250 F/T 9.9 (early '92), C75-C150, P75-P200 V /V X 150-250, F15C/F20	12

6000 RPM w/12 Pole option - Pre 2016

ENG. CYL. SWITCH SETTING
1 - 4 CYL
2 - 6 CYL
3 - 8 CYL
4 - 12 POLE OB ALT
SLIGHTLY DEPRESS WHILE TURNING

6000 RPM w/12 Pole option - 2016 & newer
7000 RPM Outboard Tach

SWITCH SETTING
1 - 4 POLE/CYL
2 - 6 POLE/CYL
3 - 8 POLE/CYL
4 - 10 POLE
5 - 12 POLE
SLIGHTLY DEPRESS WHILE TURNING

I/O and Inboard Engines

Most I/O and Inboard Applications use a Tach Setting as Follows

4 Cylinder	Setting 1
6 Cylinder	Setting 2
8 Cylinder	Setting 3

For Mercury engines use the following:

Engine	Tach Signal	Pulses	Setting
3.0 TKS	4 cyl	2P/Rev	1
3.0 MPI EC	8 cyl	4P/Rev	3
4.3 TKS	6 cyl	3P/Rev	2
4.3 MPI	6 cyl	3P/Rev	2
4.3 MPI EC	8 cyl	4P/Rev	3
4.5L MPI	6 cyl	4P/Rev	3
4.5L MPI EC	6 cyl	4P/Rev	3
5.0 MPI	8 cyl	4P/Rev	3
5.0 MPI EC	8 cyl	4P/Rev	3
350 Mag	8 cyl	4P/Rev	3
350 Mag EC	8 cyl	4P/Rev	3
377 Mag & EC	8 cyl	4P/Rev	3
8.2 Mag & EC	8 cyl	4P/Rev	3

Notes:

a. 6000 RPM tachs are for Inboard & I/O gas engine applications only

b. 7000 RPM & 8000 RPM tachs are for all outboard motor applications only. 20 Pole Tachs are no longer available.

c. Electrical pulses per revolution are equal to 1/2 the number of alternator poles.

d. Older model outboards (prior to 1977) may have the tach signal wire originating at the ignition system though they are alternator equipped. All alternator tachometers may be used on these systems by disconnecting the tach signal wire at the engine and connecting that wire to the unrectified alternator signal at the rectifier. Be certain the number of alternator poles match the tachometer pole setting of the tach.

e. TOHATSU recommends, when using aftermarket tachs on TLDI engines, using indictor light kit part number 3Y9762510 and Harness 3T5710420. Strong alternator interference on some TOHATSU / NISSAN outboards and some pre 2001 Mercury 90HP outboards may require wiring a .1mf, 100 volt non-polarized capacitor between the signal and ground stud terminals.

f. Faria Beede no longer makes a 20 pole tach.

Sending Unit Resistance Values

Trim Gauge	Measured in ohms		
	UP	MID	DOWN
Mercury / Force	160	38.7	10
Force (70 & 75 HP only)	10	20.6	41.8
Johnson/Evinrude Outboard	10	44	88
Suzuki 4 Stroke 1999 (and newer)	2.5	44	88
OMC Cobra Stern	70	29.5	11
OMC Sea Stem Drive	88	44	10
Yamaha 1996	450	240	100
Yamaha 1997-2000	550	330	100
Yamaha 2001 (and newer)**	280	150	10
Volvo SX Cobra	146	- -	11
Volvo SX (MD Mod)	70	- -	3
Volvo SX (HU Mod, NC Mod)	146	- -	11
Volvo DP (White)*	180	- -	10
Volvo DP-S (NC Mod)*	146	- -	11

* Uses a “Black Box for trim signal

** A Mercury Trim gauge may be used, ”Trim” will be the full range of the gauge.

All resistance values shown for Oil Pressure, Water Temperature and Fuel gauges are for single station. Dual station senders have 1/2 the resistance value of the single station senders.

Oil Pressure Gauge	*psi*	*ohms*	*psi*	*ohms*	*psi*	*ohms*	*psi*	*ohms*	*psi*	*ohms*
American Marine Sender	0-80 psi		0-100 psi		0-150 psi		0-350 psi		0-400 psi	
	0	240	0	240	0	240			0	1
	40	103	40	103	75	103			200	44
	80	33.5	100	33.5	150	33.5			400	88
European Marine Sender	5 Bar		7 Bar		10 Bar		25 Bar		0-400 psi	
	0	10			0*	10	0	10	0*	10
	40	95			90	112	12.5	95	200	112
	80	180			150	180	25	180	400	180

* For use with Competition series 150 psi, 400 psi and Dress White 400 psi.

Water Temperature Gauge	*˚F*	*ohms*	*˚C*	*ohms*
American Marine Sender	100˚F - 250˚F		40˚C - 120˚C	
	100	450	40	450
	175	99	65	99
	250	29.6	120	29.6
European Marine Sender			40˚C - 120˚C	
			40	281
			65	68
			120	22

Fuel Level Gauge	Measured in ohms		
	EMPTY	1/2	FULL
American Marine Sender	240	103	33.5
European Marine Sender	10	95	180

Cylinder Head Temp. Gauge	*˚F*	*ohms*	*˚C*	*ohms*
Faria Beede Marine Sender only (Single Station Sender)	60˚F - 220˚F		20˚C - 100˚C	
	60	1195	20	1040
	140	192	60	192
	220	46.5	100	56

Rudder Angle Indicator	Measured in ohms		
	PORT	MID	STARBOARD
Sender	10	95	180

ABYC - Engine and Accessory Wire Color Code Guide

The ABYC (American Boat and Yacht Council) has the following suggested marine wiring color codes:

Color	Item	Use
Yellow with Red stripe (YR)	Starting circuit	Starting switch to solenoid.
Brown with Yellow stripe (BY) or Yellow (Y) - see note.	Bilge blowers	Fuse or switch to blowers.
Dark Gray (Gy)	Navigation lights Tachometer	Fuse or switch to lights. Tachometer sender to gauge.
Brown (Br)	Generator armature Alternator charge light Pumps	Generator armature to regulator. Generator. Terminal/alternator Auxiliary terminal to light to regulator. Fuse or switch to pumps.
Orange (O)	Accessory feed	Ammeter to alternator or generator output and accessory fuses or switches. Distribution panel to electric instruments.
Purple (Pu)	Ignition Instrument feed	Ignition switch to coil and electrical instruments Distribution panel to electric instruments.
Dark Blue (DkBl)	Cabin and instrument lights	Fuse or switch to lights
Light Blue (LtBl)	Oil pressure	Oil pressure sender to gauge
Tan	Water temperature	Water temperature sender to gauge
Pink (Pk)	Fuel gauge	Fuel gauge sender to gauge
Green stripe (G/x)	Tilt down and/or trim in	Tilt and/or trim circuits
Blue stripe (Bl/x)	Tilt up and/or trim out	Tilt and/or trim circuits

Note: If yellow is used for DC negative (-), blower must be Brown with Yellow stripe.

Each electrical conductor that is part of the boat's electrical system shall have a means to identify its function in the system. EXCEPTION: Pigtails less than seven inches (175 mm) in length.

The color code shown above from the ABYC identifies one selection of colors for use as an engine accessory wiring color code. Other means of identification may be used providing a wiring diagram of the system indicating the method of identification is provided with each boat. Color-coding may be accomplished by colored sleeving or color application to wiring at termination points. If tape is used to mark a wire, the tape shall be at least 3/16 inch (5 mm) in width, and shall have sufficient length to make at least two complete turns around the conductor to be marked. The tape shall be applied to be visible near each terminal.

Selecting the Proper Sender

Senders are designated by the following descriptions and must be selected in combinations of one each from A, B, & C. (For example: Single station, American resistance, Standard ground)

A	Station[a]	Single
		Dual
B	Resistance[b]	American
		European
C	Ground[c]	Standard
		Floating

Notes:

a. Station: It is the sender that is unique in a dual station application. The gauge is the same in either single or dual applications.

b. Resistance: Choose your sender to electrically match your gauge not just the manufacturer. Some sender manufacturers make both resistance types; and, some instrument manufacturers may use either resistance type depending on the gauge. There is usually no visual way alone to determine the resistance type.

c. Ground: Standard ground is the most common having battery negative (-) connected directly to the engine block. Sending units may have one (1) terminal (signal). In a floating ground system, the battery negative is not connected to the engine block so merely threading in the sender does not supply ground.

Floating ground senders will have two (2) terminals (signal & ground). Both sender terminals may be wired to the appropriate gauge terminal or the sender's ground may be wired directly to the battery negative. A floating ground sender may be used in a standard ground system but not vice versa.

Oil Pressure Senders

Engines or transmissions equipped with a low oil pressure switch that activates a warning light require an appropriate “T” pipe fitting to accommodate both pressure sender and warning light.

Most oil pressure sending units have 1/8” NPT pipe threads and are usually mounted in the engine’s block. If the block or transmission case has a larger pipe size, an appropriate bushing may be used without affecting pressure- sensing accuracy.

Temperature Senders

Temperature senders are available from Faria® Marine Instruments in 1/8” NPT thread sizes. If your water jacket, oil pan or transmission housing requires a thread diameter larger than 1/8” NPT, a bushing will be required. “

T” fittings should NOT be used as these may affect the accuracy of the sender by reducing the temperature signal.

Testing a Faria Beede Gauge with an American Resistance Sender

Test Gauge

1.) To test the discrete gauge without a Faria tester; power up the gauge by connecting the power wire to the ignition (marked “I”) stud and ground wire to the ground stud (marked “GND”).

2.) Then use a use a jumper wire to connect the signal (marked “S”) stud to the ground stud.

3.) At this time to pointer should deflect to the extreme right on the dial and stay there as long as the sender stud and ground stud are shorted.

4.) It the gauge needle does not move or read full deflection to the right it is defective.

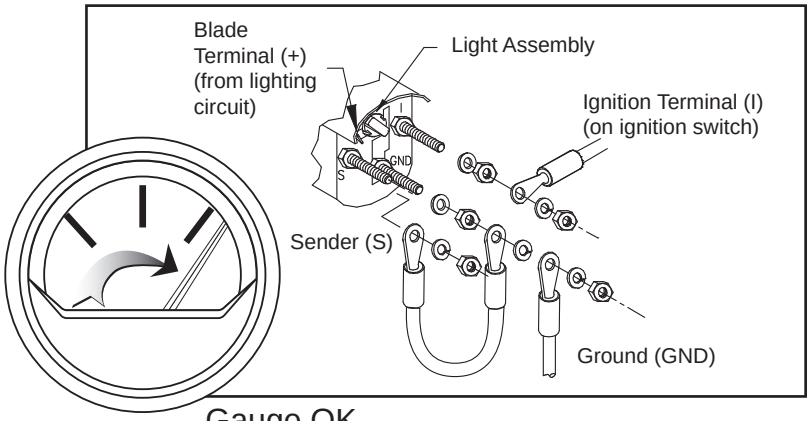

Gauge OK

Test Gauge with a Faria Tester

1.) From the gauge, connect the leads from the test box as follows:

Red wire to the **IGNITION** stud
Black wire to the **GROUND** stud
Green wire to the **SEND** (Sender) stud.

2.) Set the toggle switch on the test box to: **GAUGE**.

3.) Set the power switch to the **AC** position.

4.) Use the **GAUGE RESISTANCE** knob to sweep the gauge.

5.) If the gauge sweeps without any signs of the meter being “sticky” then the gauge is good.

Note: This is not a calibration check.

If problem still exists then check the sender.

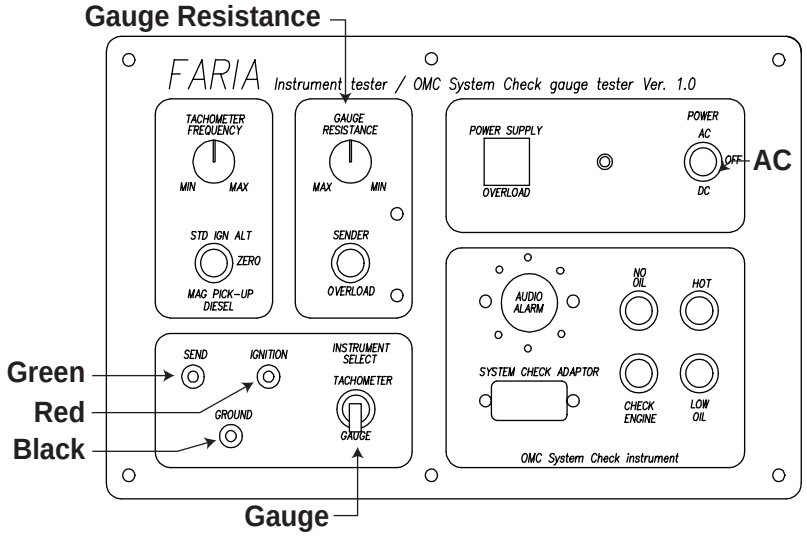

To test an American resistance sender

1.) Unhook the sender (**S**) wire from the back of the gauge.

2.) Use an ohmmeter to measure the resistance between the sender wire and ground stud (**GND**) on the gauge.

Fuel Level	
240 Ohms	Empty
103 Ohms	½ Tank
33.5 Ohms	Full

Temperature	
450 Ohms	100˚F
99 Ohms	175˚F
29.6 Ohms	250˚F

Oil Pressure	
240 Ohms	0 PSI
103 Ohms	40 PSI
33.5 Ohms	80 PSI

3.) ***If you obtain a 0.0 reading*** then there is a short in the wiring or the sender.

If you obtain a “OL” or open lead reading then the sender or wiring has an incomplete circuit.

4.) To narrow down the search for the fault after measuring the resistances at the gauge, unhook the sender wire from the sender and measure the resistance directly at the sender.

5.) If you now have a proper resistance reading then the wiring is at fault. If the readings are still incorrect then the problem is the sender.

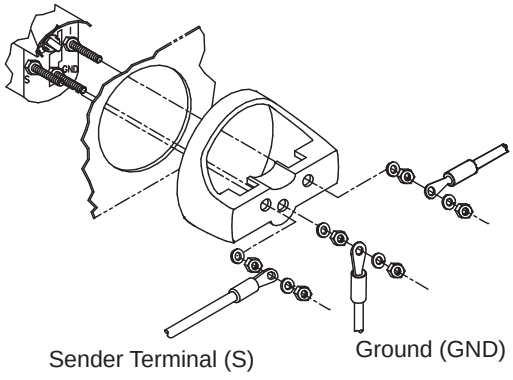

Note: Not for use with the Trim sender. Please contact Faria for Trim sender tests.

Testing with the Faria Instrumentation Tester

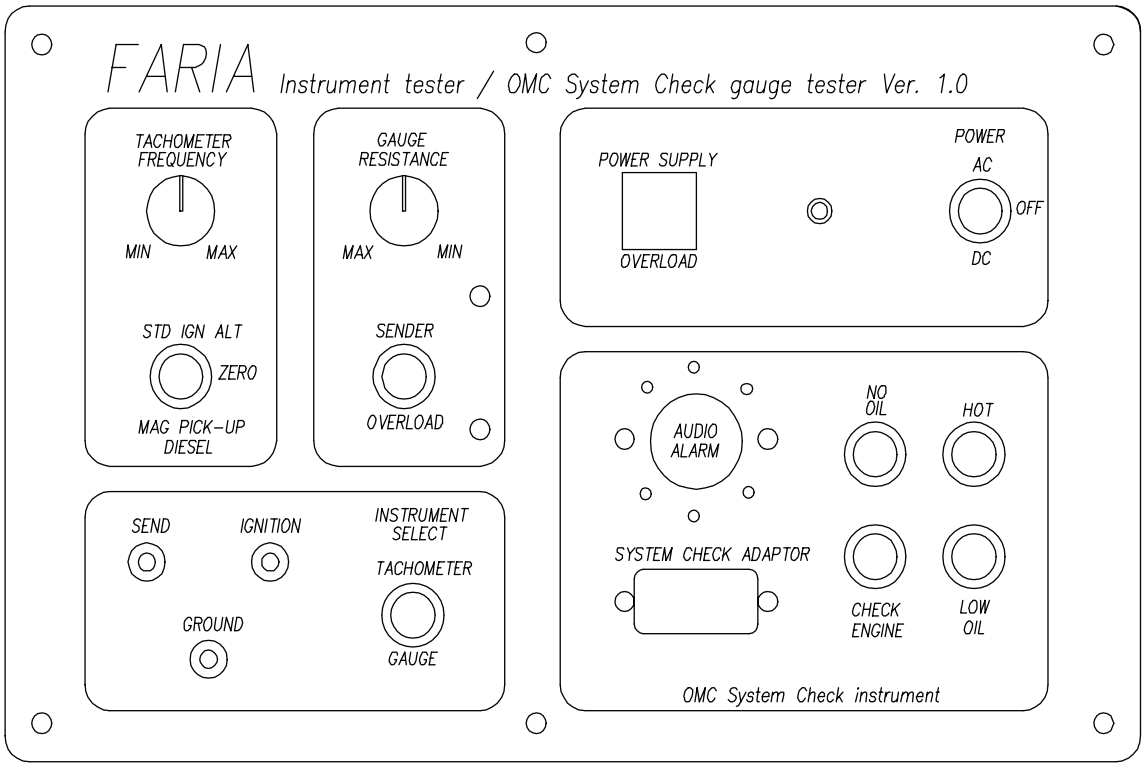

The Faria Beede Tachometer and Gauge Tester is an engine tachometer (signal) and gauges (sender) substitution box designed to check the correct operation of engine electrical instrumentation.

The unit may be used with a 115 VAC or 12 VDC external battery source.

Tachometer Frequency
Rotate clockwise for increasing revolutions per minute and counter clockwise for decreasing RPM.

Gauge Resistance
Rotate clockwise for decreasing resistance (higher gauge readings in most cases) and counter clockwise for increasing resistance (lower gauge readings in most cases).

Instrument Select
With the switch “up” toward the “TACHOMETER” position; outboard alternator tachometers, inboard and inboard/outboard 4-cycle gas engine tachometers and diesel tachometers driven by diesel pulse generators or magnetic pick-ups may be tested for operation.

With the switch “down” toward the “GAUGE” position; 12 volt gauges which operate anywhere in the resistance range of 0-1000 ohms may be tested.

Wire Colors
Send: (Sender) (Green)
Ignition: (+) (Red)
Ground: (-) (Black)

ZERO
Standard Ignition Alternator, Mag Pick-up Diesel.
[UP] For 4-cycle gas engines, alternator, and diesel pulse generator signal source tachometer.
[CENTER] Zero indicating tachometer is “live”.
[DOWN] For testing diesel tachometers that use a magnetic pick-up as a signal source.

POWER
AC / DC - adjacent LED will light indicating power is “on”
[UP] Selector switch for 115 VAC
[CENTER] OFF
[DOWN] Selector for 12 VDC - external battery power.

Testing with the Faria Instrumentation Tester

To test any instrument: (bench test, out of boat)

1) Plug tester into a 115 VAC outlet
2) Set “POWER” switch to “OFF” (center position)
3) Insert banana plugs into corresponding color coded connectors on front of box.
4) Connect alligator clips to corresponding terminals on rear of gauge or tachometer to be tested.
   a) Red to ignition or battery (+) terminal
   b) Green to signal or sender terminal
   c) Black to ground (-) terminal
5) Switch “POWER” switch to “AC” position (up)
6) Switch “INSTRUMENT SELECT” switch to position corresponding to instrument being tested
   a) up for all tachometers
   b) down for all gauges
7) Follow procedure outlined in IS0087 - Test Gauge with a Faria Beede Tester, for tachometer, discreet or OMC gauge testing.
8) Set “POWER’ switch to ”OFF’ (center) position.
9) Remove alligator clips form back of gauge.

To test any instrument: (in a boat, using the boat’s 12 VDC power)

1) Disconnect the signal wire from the instrument.
2) Connect alligator clips to the corresponding terminals on the back of the gauge after positively identifying them visually, with a wiring diagram, or a voltmeter.
3) Set ‘POWER’ switch to ‘DC’ position (down).
4) Turn boat’s ignition switch “ON”.
5) Follow procedure outlined in IS0087 - Test Gauge with a Faria Beede Tester, for tachometer, discreet or OMC gauge testing.
6) When test is complete, turn boat’s ignition switch ‘OFF’, return ‘POWER’ switch to “OFF” (center) position.
7) Remove alligator clips from instrument terminals.
8) Reconnect the signal wire to the instrument.

To test a Tachometer

1) Switch ‘STD IGN-ZERO-DIESEL’ switch to ‘ZERO’, tachometer should go to “zero”.
2) Switch ‘STD IGN-ZERO-DIESEL’ switch to setting appropriate to tachometer being tested, as described above.
3) Start with Tachometer Frequency Adjust control in full counter clockwise position (min).
4) Slowly rotate control know in the clockwise direction. As tachometer begins to indicated/change RPM reading, continue to rotate know slowly until the highest reading is obtained. (May be less than full scale.)
5) Rotate control counter clockwise until pointer return to lowest reading (may not be zero); repeat procedure and check for smoothness of operation.
6) Set “POWER’ switch to ”OFF’ (center) position.
7) Remove alligator clips form back of gauge.

To test a Gauge

1) Start with Gauge Resistance in either full clockwise (min) or full counter clockwise (max) position.
2) Slowly rotate control knob until gauge pointer moves from initial starting position.
3) Continue rotating control knob until gauge reads full scale opposite from initial starting position.
4) Return control knob to initial starting position. Pointer should return to original starting position smoothly.
5) Repeat test and observe pointer for smoothness and operation.

Optional OMC System Check Tester

To test a System Check Tachometer or Operator Warning System gauge;

1) Plug the tester into a 115 VAC outlet.
2) Connect the instrument to the test box with the 8-pin connector cable.
3) Turn the “POWER” switch to the ‘AC” position as described above. The four warning lights simultaneously come on and the alarm will sound once indicating that the lights and alarm circuits are functional. The lights will then sequentially go out from left to right. IF a light or the alarm stays on the instrument is defective.
4) To further test the tachometer sweep proceed as above, “To Test a Tachometer” steps 1-5.
5) To test individual warning lights and the alarm for either a tachometer or warning light gauge, apply a tachometer signal to the instrument as in “To Test a Tachometer” step 4, press the appropriate light button.

   If the instrument is working properly the warning light will come on and stay lit and the alarm will sound for 12 seconds. IF the light goes out or the alarm stays on the instrument is defective.
6) Set “POWER” switch to “OFF” (center) position.
7) Remove the 8-pin connector cable.

Serial Bus - Discrete Digital Instruments (MG3000)

The discrete Digital instrument connects directly to the MG3000 Tachometer. Digital signals are processed by the engine and sent through the Tachometer providing an easy to use display of the information. The stepper motor driven pointer provides accurate feedback of the information reported by the engine ECU.

Use stranded, insulated wire not lighter than 18 AWG.

Be certain wire insulation is not in danger of melting from engine or exhaust heat or interfering with moving mechanical parts.

Available in Digital Trim, Water Pressure gauge, Fuel Level, Voltmeter, Water Temperature gauge, Tank Level, Rudder Angle and Oil Pressure gauge.

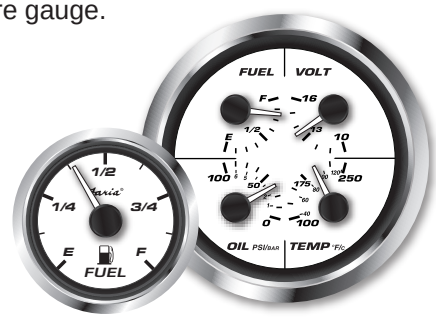

Plug-N-Play Daisy Chain connections

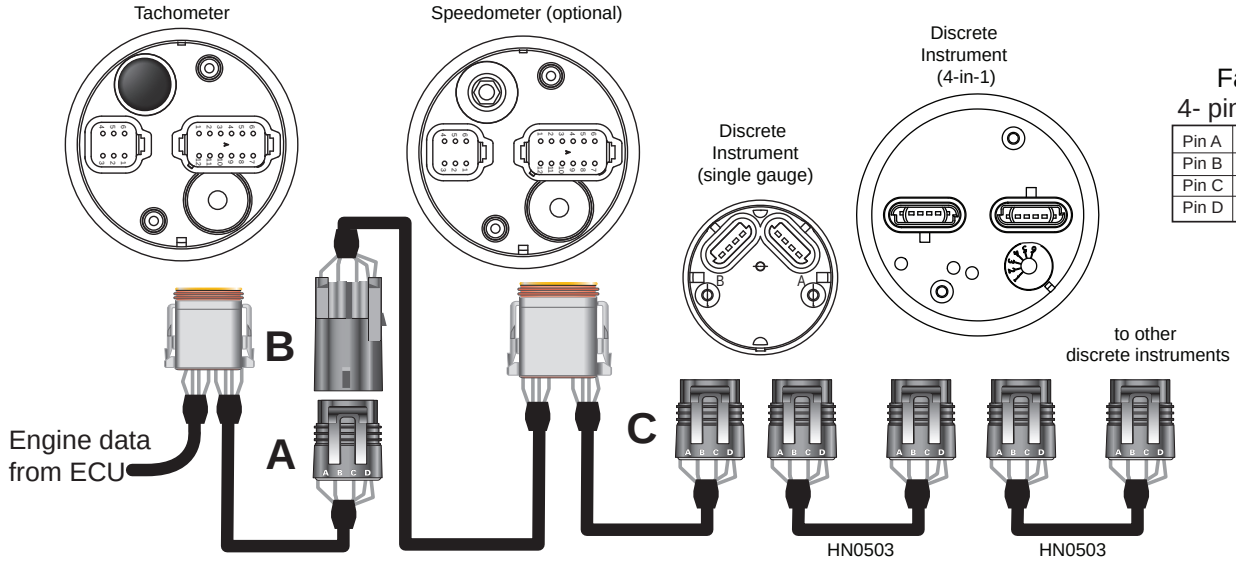

Installation

1. Cut a hole in the dash allowing a clearance of 3” (80 mm) for wires.

   2.063” (53 mm) diameter hole (2 inch Instruments)
   3.375” (85 mm) diameter hole (4 inch Instruments)
   4.375” (112 mm) diameter hole (5 inch Instruments)

   Mount the gauge with the backclamp supplied. Use the supplied washers and nuts and tighten.

2. Connect the Packard connector (A) from the Tachometer into either of the discrete instrument’s molded packard connectors on the back of the instrument.

   Note: If a Digital Speedometer is in use, the harness that connects to the Tachometer is equipped with a Packard socket (B) to connect the Speedometer to the Tachometer. Connect the other instruments using the Packard connector (C).

3. Connect more discrete instruments using HN0503.

Operation

1. When first starting the instrument the pointer may move to full scale and return to a normal reading. This is normal and represents a self test operation performed by the Tachometer.
2. After the Self Test the instrument displays the discrete information sent by the ECU.
3. Lighting is controlled by the system lighting setting in the Tachometer. Consult the Tachometer Operations Manual for lighting adjustments.

Getting Started with the MG3000

The MG3000 instruments use a “plug and play” networking technology based on NMEA 2000 data communication standards (National Marine Electronics Association) and/or SAE J-1939. These standards provide communications through a serial data network utilizing a Controller Area Network (CAN) integrated circuit (IC). The network operates at 250 kb/second and allows multiple electronic devices to be connected together on a common channel for easy information sharing. Multiple digital displays can be used to monitor and broadcast equipment and engine data.

The MG3000 tachometer is controlled by a three-button keypad.

Some functions may not be available on all systems.

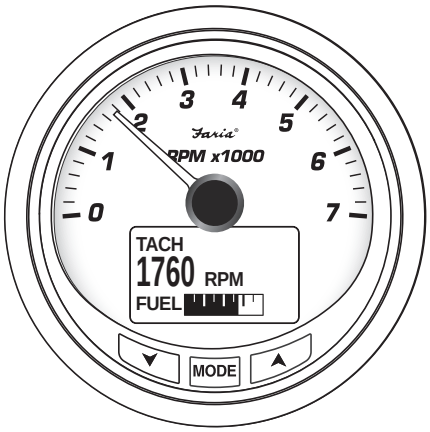

Normal Mode

MODE **Press the MODE button**

▼▲ **Select Function**

Reset Totalizer	**-** Resets the Total Fuel Used
Trip Data	**-** Records Engine Hours, Fuel Used, Odometer and Fuel Rate
Smart Tow	**-** Operate the Smart Tow functions of your engine
Fuel Set up	**-** Quickly access and add fuel to one of fuel tanks
Edit Menu	**-** Makes global Tachometer settings changes
Contrast	**-** Adjusts the LCD display contrast
Lighting	**-** Adjusts the lighting levels
Depth Warning	**-** Sets the depth of the water alarms

MODE **Press the MODE button to select**

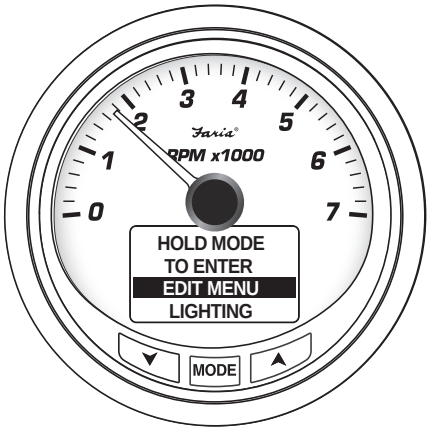

Edit Menu

MODE **From the Normal mode, select “EDIT MENU” and press the MODE button**

▼▲ **Select Function**

System	- Makes global tachometer changes, Self Test, Master Reset and Software
Cal Speedo	- Calibrate the Paddle Wheel sender
Cal Trim	- Calibrate the Trim sender
Fuel Set Up	- Sets and manages the Fuel devices
Display	- Edit the Data Pages, adjust Lighting and Contrast
Data Sources	- Selects the sources for Engine parameters, Battery, Oil sender and Analog Inputs
Pop Up Alerts	- Defines information in Pop Up alerts
Custom Alarms	- Sets special Pop Up alerts
Max Speed	- Records highest speed during last period

MODE **Press the MODE button to select**

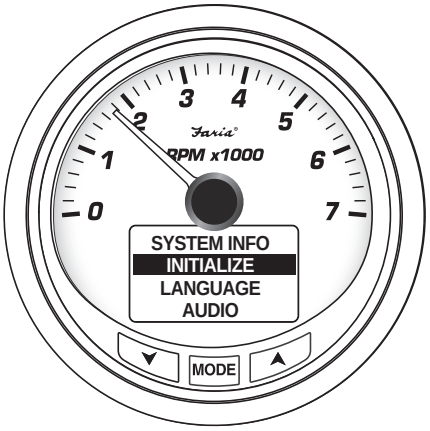

System Menu

MODE **From the Edit Menu, select “SYSTEM” and press the MODE button**

▼▲ **Select Function**

Initialization	- Forces the MG3000 into Initialization without a Master Reset. Allows operator to make a change to specific data without affecting current settings.
System Language	- Language displayed in menu screens
Audio Settings	- Sets rules for the sounds in the MG3000
Clock Settings	- Sets Clock parameters
Alarms	- Viewing Current and Past alarms.
Set Units	- Changes the basic units used for Data
Perform Self Test	- Tests the basic functions of the MG3000 and all connected instruments on the Faria Bus.
Software Version	- Shows the installed Software Revision
Perform Master Reset	- Resets the MG3000 to Factory Specifications

MODE **Press the MODE button to select**

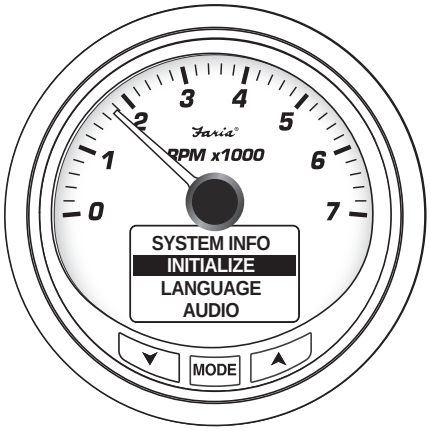

Initialization - When the MG3000 is first started it starts with the Initialization of the instrument. This procedure is often performed at the factory or builder location.

MODE **From the System Menu, select "INITIALIZE" and press the MODE button**

You will be asked a series of questions asking for your system set-up.

1) Select Language MG3000 supports 5 languages; Engine, Spanish, French, Italian and German

2) GMT Clock Offset Settings - set to your GMT offset

3) Engine ID Engine Initialization -
1) Select Number of Engines
2) Identify Engine location
   a) Port
   b) Starboard
   c) Mid Port
   d) Mid Starboard

4) Default Display Units US Standard or Euro (Metric)

5) Number of Tanks Identify the number of tanks connected to and will be monitored by the MG3000. The MG3000 can monitor up to 5 tanks per MG3000.
Important: All fuel tank information MUST be set up in the PORT tachometer if more than one MG3000 tachometer is in use.

6) Set Type of Tank Identify the type of tank being monitored. You must identify each tank you listed in step 5.
Tanks supported

- Oil Level
- Fresh Water
- Bait Well
- Ballast
- Gray Water
- Black Water
- Fuel

Set up complete

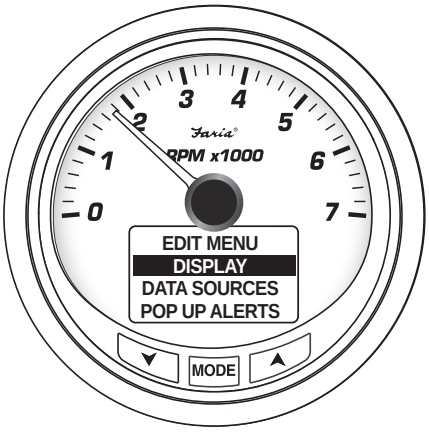

Display Setting Menu

MODE **From the Edit Menu, select "DISPLAY" and press the MODE button**

▼▲ **Select Function**

# of Data Pages - Sets the number of Data pages the MG3000 will display.

Screen Set Up - Select the data fields that are shown on each page in the Normal mode.

Line 2 Data - Selects which data is shown in the line 2 data



- Fuel Level
- Trim
- Water Level
- Oil Level
- Load
- Off

Data Page Auto Scroll - When active the Normal mode pages are automatically switched at a user defined interval.

LCD Color - If available, this function changes the back lighting color of the LCD.

MODE **Press the MODE button to select**

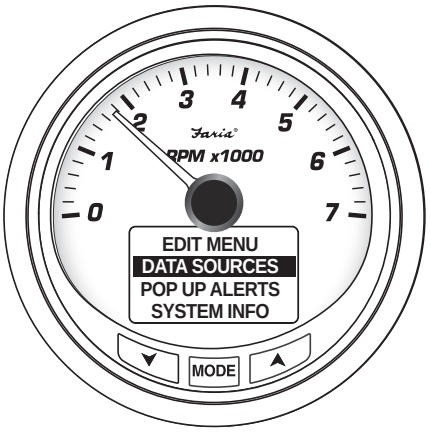

Data Sources Menu

MODE **From the Edit Menu, select “DATA SOURCES” and press the MODE button**

▼▲ **Select Function**

- **Tanks**
- **Engine Data Source**
- **Engine Maintenance Interval**
- **Reset Engine Maintenance Interval**
- **View Engine ID**
- **Remaining Fuel Source**

MODE **Press the MODE button to select**

▼▲ **Select the source of the data to be displayed**

Digital data

SOURCE
US 240-33
EU 10-180
BUS DATA - 0

Analog source

Select the pin where the signal will be attached to the MG3000

ANALOG
#1 P1-6
#2 P1-7
#3 P1-8

MG3000 Tachometer

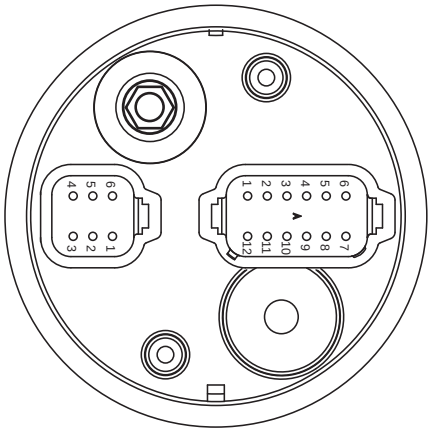

12- pin connector

Pin 1	7.7 vDC (Faria Bus +)
Pin 2	Faria Bus A
Pin 3	Faria Bus B
Pin 4	Ground
Pin 5	12vDC Ignition
Pin 6	Analog Input 1
Pin 7	Analog Input 2
Pin 8	Analog Input 3
Pin 9	• NMEA B+ • J1939 12 vDC Ignition (jumper to pin 5)
Pin 10	• NMEA Ground • J1939 Shield
Pin 11	• NMEA CAN Hi (+) • J1939 CAN Hi (+)
Pin 12	• NMEA CAN Low (-) • J1939 CAN Low (-)

Pin 6 Analog input
Pin 7 Analog input
Pin 8 Analog input

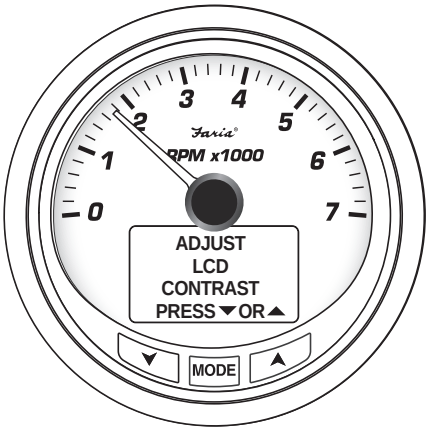

Adjust LCD Contrast

MODE **From the Normal mode, select “CONTRAST” and press the MODE button**

▼▲ **Adjust Contrast**

- **22 Levels of contrast**
- **Changes to Negative mode 1/2 way trough selects**

ADJUST
LCD
CONTRAST
PRESS ▼ OR ▲

ADJUST
LCD
CONTRAST
PRESS ▼ OR ▲

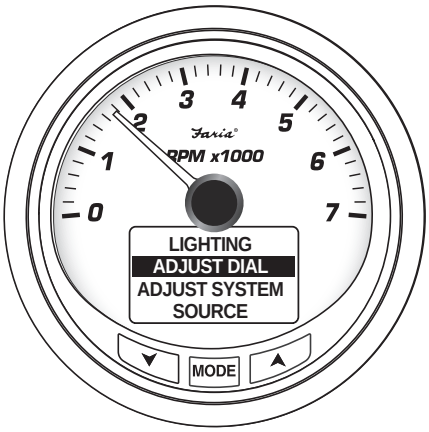

Adjust Brightness

MODE **From the Normal mode, select “LIGHTING” and press the MODE button**

▼▲ **Select the lighting to be adjusted**

- **Tachometer Dial**
- **System Lighting**

MODE **Press the MODE button to select.**

▼▲ **Adjust level**

MODE **Press the MODE button to save**

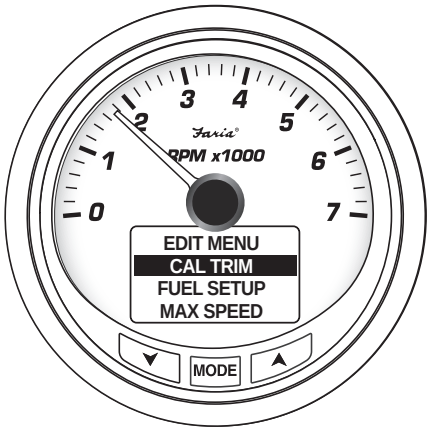

Calibrate Trim

MODE **From the Edit Menu, select “CAL TRIM” and press the MODE button to select.**

Lower the Engine to the full DOWN position.

MODE **Press the MODE button to save.**

Raise the Engine to the full UP position.

MODE **Press the MODE button to save.**

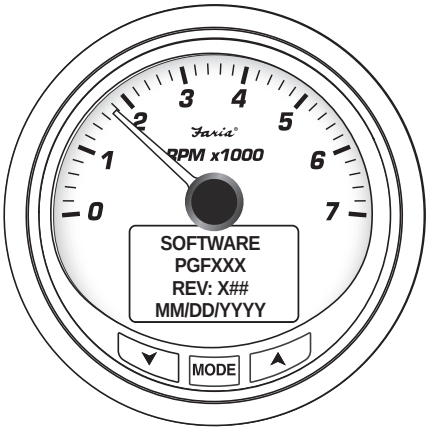

Software Version

MODE **From the System Menu, select “Software” and press the MODE button to select.**

PGFXXX - Program Identifier

REV Program Rev.

MM/DD/YYY - Date of software release

Troubleshooting the MG3000

Troubleshooting

Before calling Faria Beede Customer Service for technical support be sure to have your Software Version available for the technician. Also check the following solutions we've found for questions asked.

Tachometer - No Data in Display

Is the Power connected?

MG3000 Tachometer

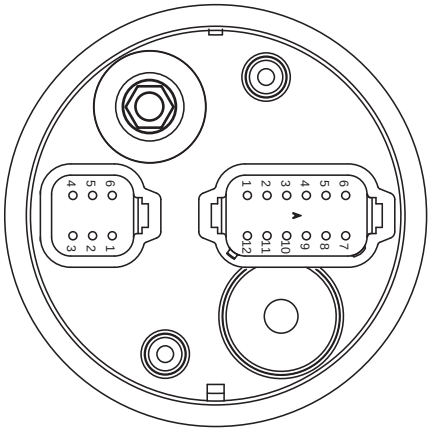

12- pin connector

Pin 1	7.7 vDC (Faria Bus +)
Pin 2	Faria Bus A
Pin 3	Faria Bus B
Pin 4	Ground
Pin 5	12vDC Ignition
Pin 6	Analog Input 1
Pin 7	Analog Input 2
Pin 8	Analog Input 3
Pin 9	• NMEA B+ • J1939 12 vDC Ignition (jumper to pin 5)
Pin 10	• NMEA Ground • J1939 Shield
Pin 11	• NMEA CAN Hi (+) • J1939 CAN Hi (+)
Pin 12	• NMEA CAN Low (-) • J1939 CAN Low (-)

Pin 4 is connected to ground
Pin 5 is connected to the 12 VDC ignition.

Is the MG3000 connected to the CAN bus?

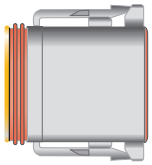

Pin 10 is connected to CAN ground
Pin 11 is connected to CAN Hi (+).
Pin 12 is connected to CAN Lo (-).

NMEA 2000
SAE J-1939
SmartCraft

Other things which could cause Data to not be shown in the display.

Note: MG3000 is a digital gauge, if some of the data is present then assume the MG3000 is working properly.

Check that the sensor is installed.

Check that the sensor is connected to the bus.

Discrete Gauges - not working

Is the Power connected?

Is the data shown on the MG3000 the same?

Discrete Gauges are a secondary method of showing data. All data is collected and displayed by the MG3000. Check to see if the data shown on the discrete gauges is the same as what is shown on the MG3000. If the MG3000 appears to be working check the discrete instrument.

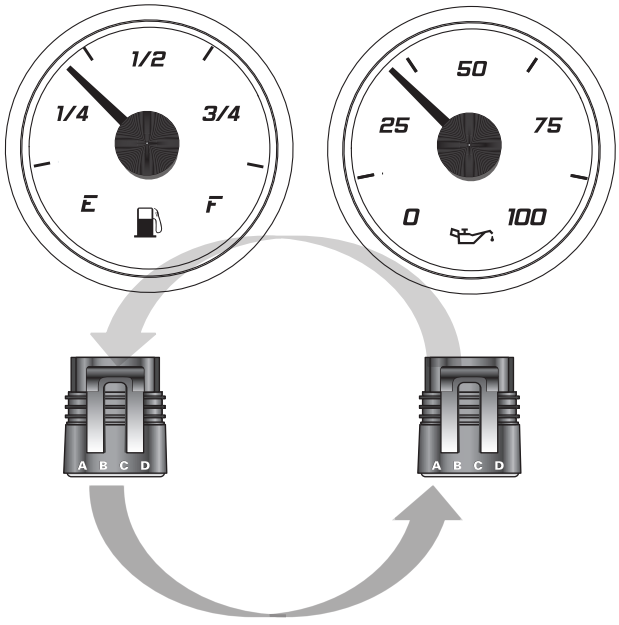

Swap out test

If the discrete gauge does not appear to be working swap the connector with another 2-inch Discrete gauge. If the instrument moves then check the sensor or the connect.

(This page left blank intentionally.)

Troubleshooting - Quick Reference Guide

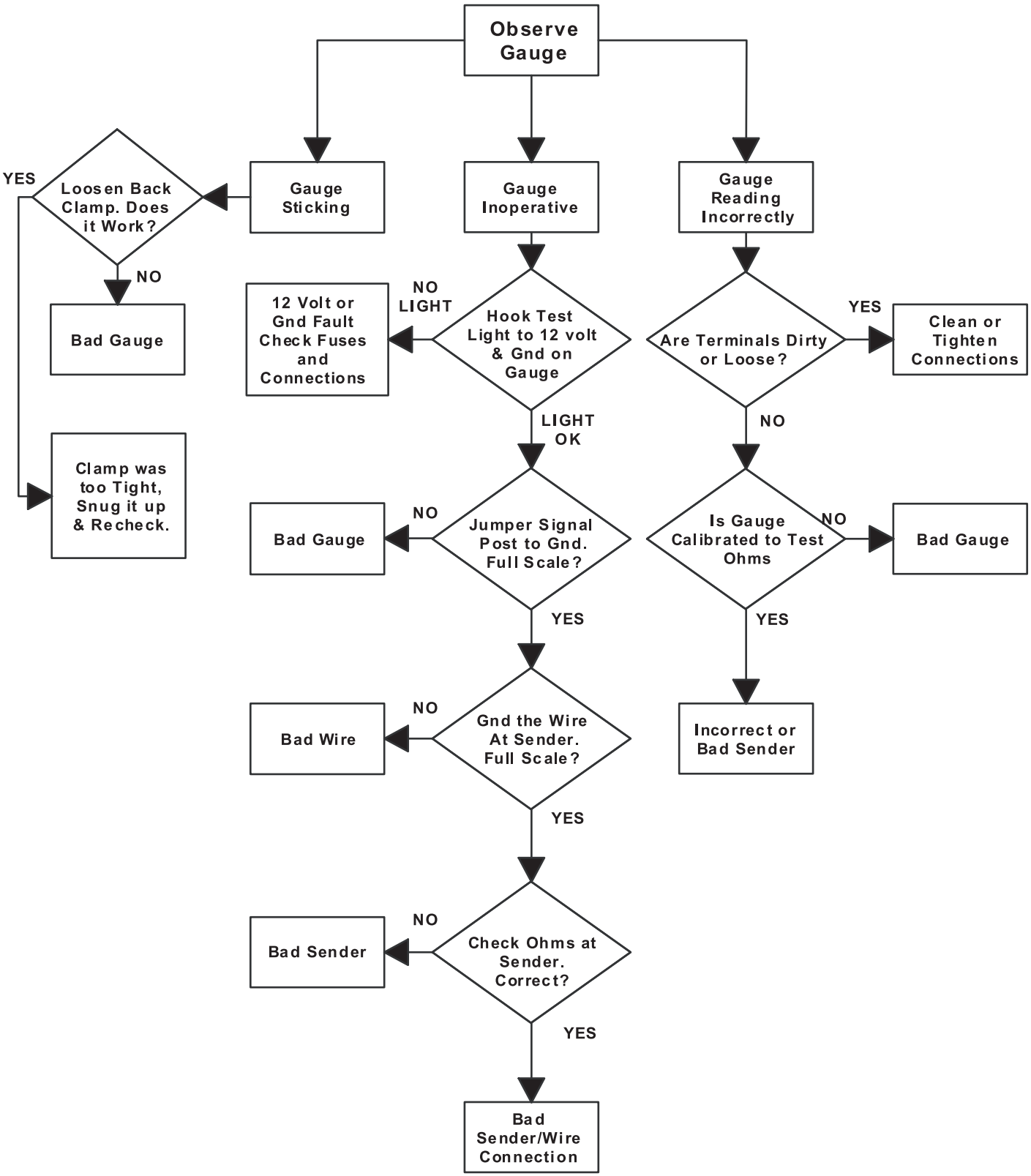

IS0100 - Technical Support and Troubleshooting Guide

Faria Beede Instruments, Inc.
75 Frontage Rd., Suite 106
North Stonington, CT 06359
860.848.9271
Fax: 860.848.2704

For technical assistance,
contact Faria Beede Instruments - Customer Service
Weekdays, between 8:30 AM and 5:30 PM (EST)
at (860) 848-9271 or (800) 473-2742.



Made in the USA

www.FariaBeede.com